Class D
Power Amplifiers

- A Class D amplifier is a **switching amplifier** based on pulse-width modulation (**PWM**) techniques
- Purpose: high efficiency, 80% - 95%.
- The reduction of the power dissipated by the amplifying transistors is due to the switching operation mode
- Increase in efficiency and reduction of the physical dimensions of the heatsink
- Class D amplifiers are involved in portable equipment, battery operated equipment, equipment with space constraints, etc.

Amplifying (power) stage

- The amplifying transistors are complementary, operating in switching mode (logic invertor)
- **Current gain**

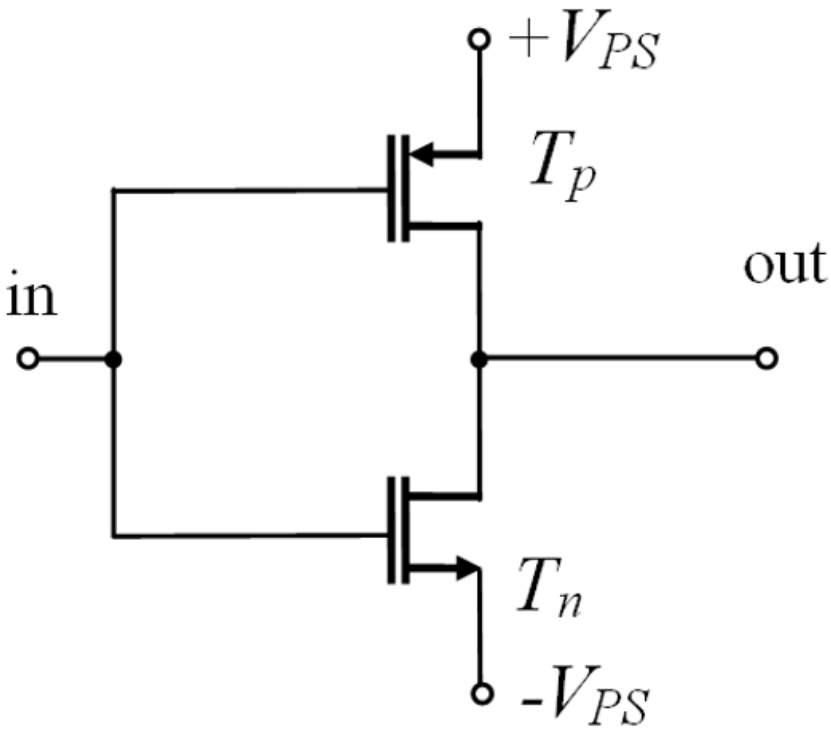

Block Diagram. Operation Principle

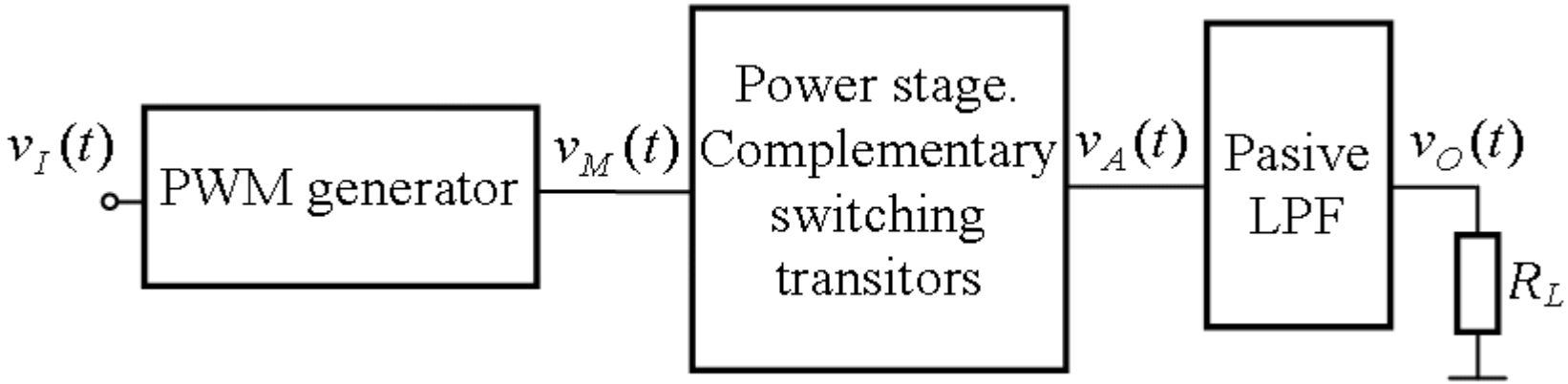

- The input signal (v_I) is converted into a pulse-width-modulated (PWM) signal (v_M) with a much higher frequency (switching frequency).

- v_M has a constant period but variable duty-cycle, modulated by the instantaneous value of the input signal.

Reconstruction of the useful signal

LP filtering: the fundamental frequency is extracted from the amplified PWM signal (v_A) while the switching frequency and superior harmonics and components are removed.

PWM Generator

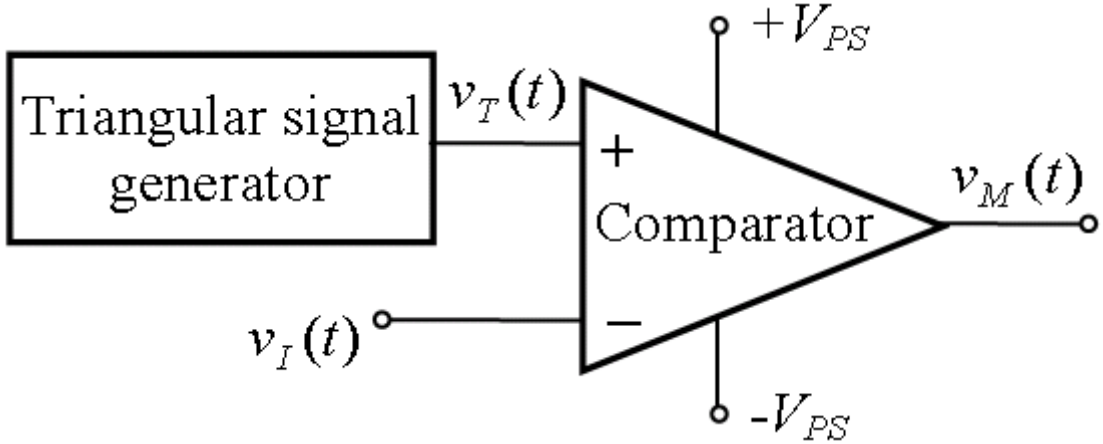

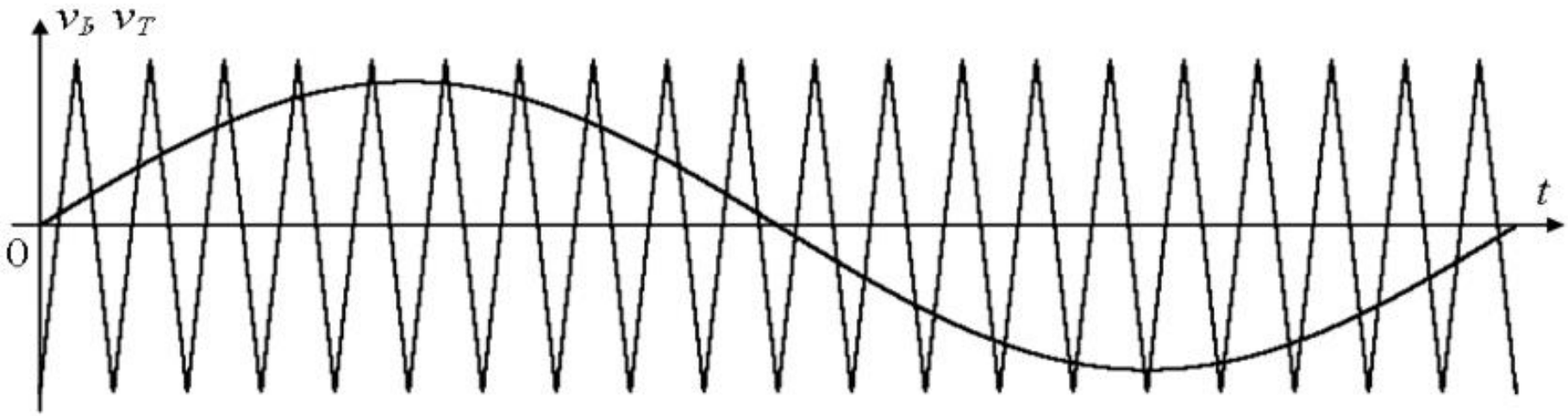

$v_M(t)$?

PWM Generator

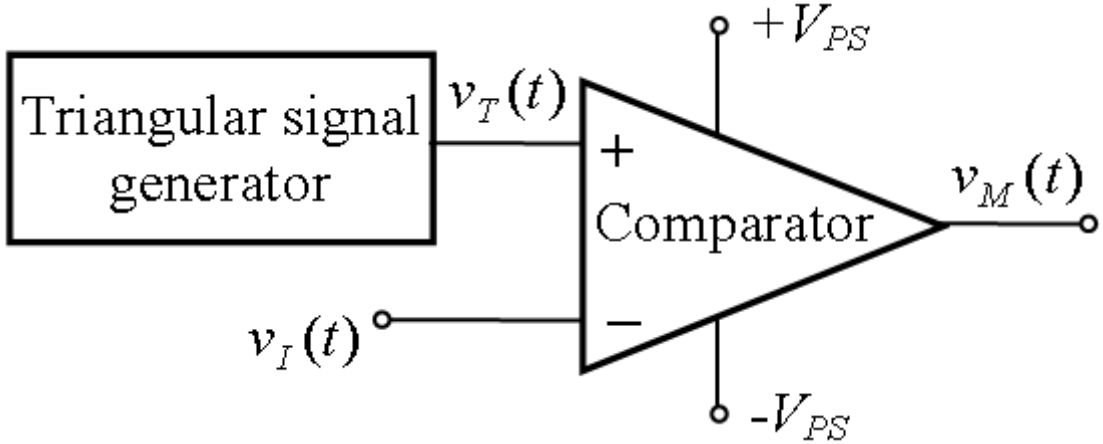

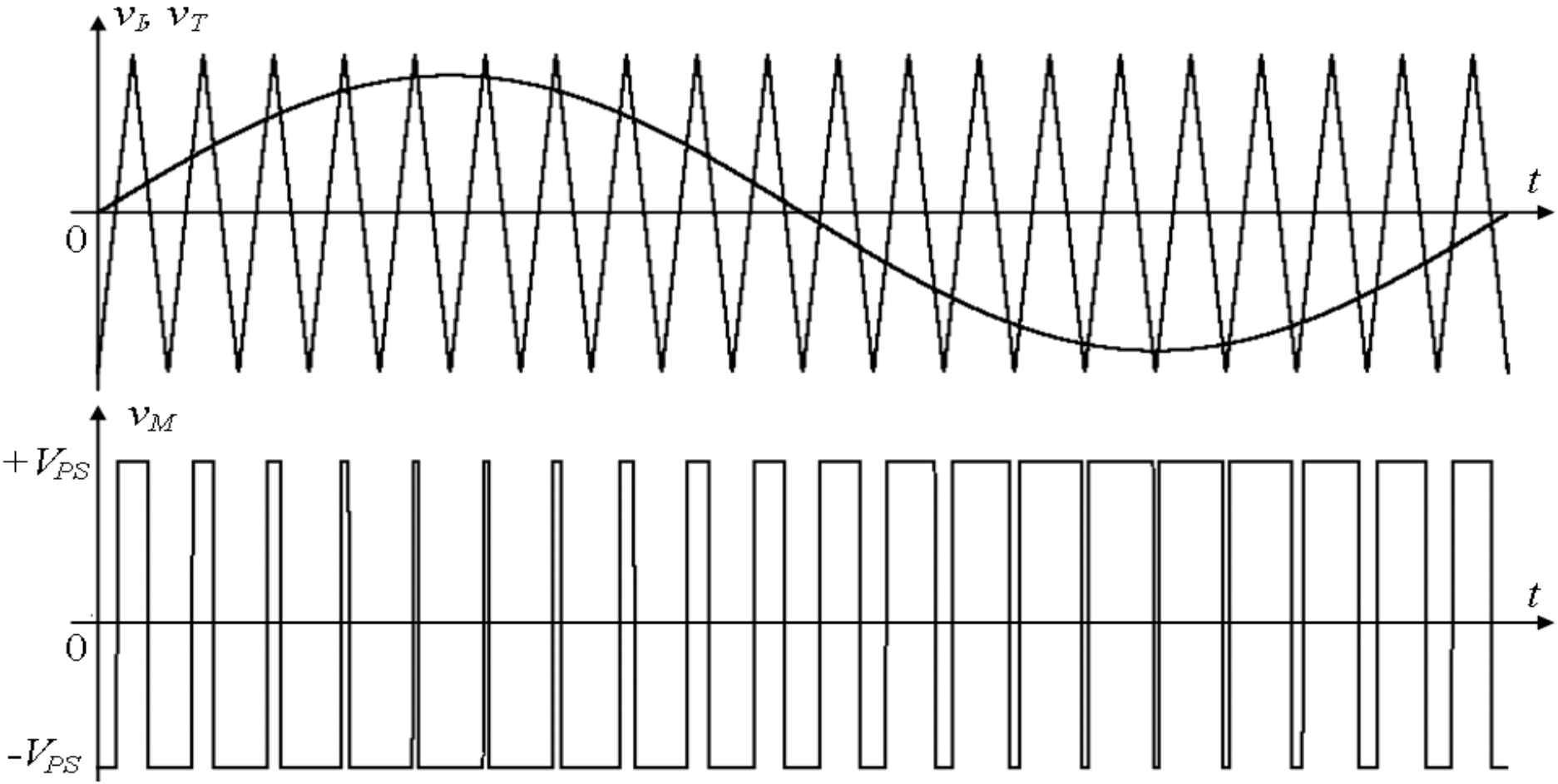

Power stage

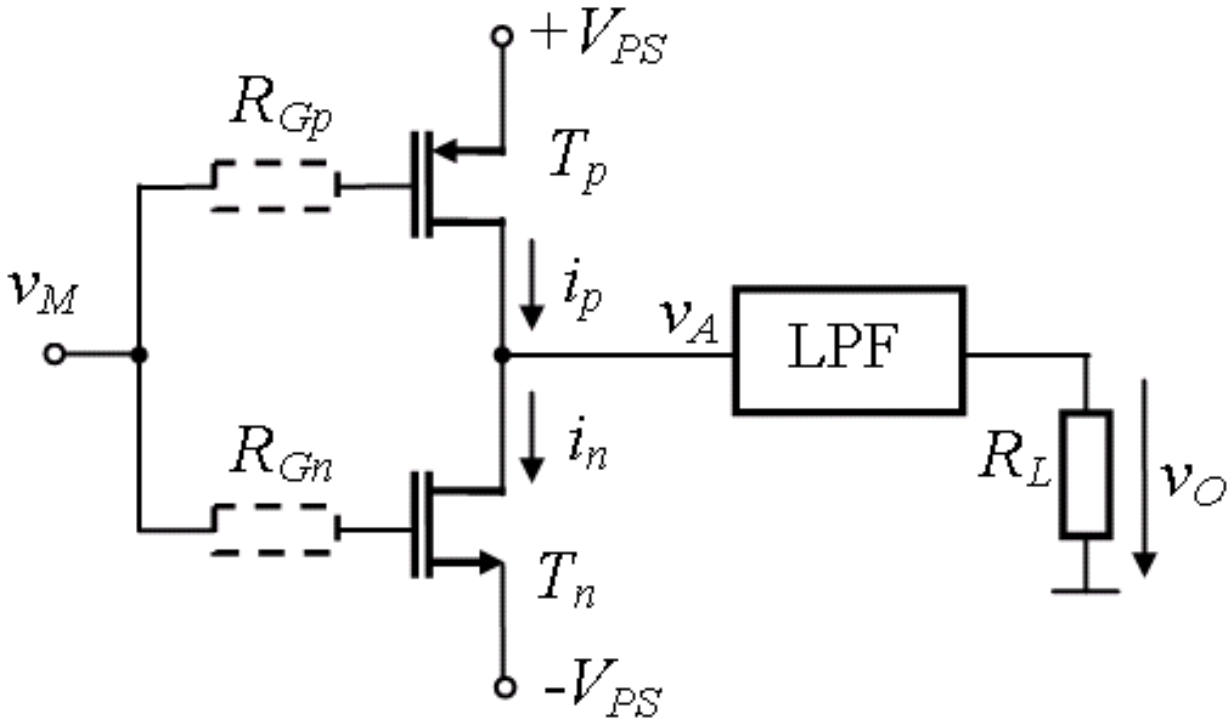

Each transistor commutation happens in a finite time.

During the commutation there is some (small) power dissipation across the transistors.

$v_{M_L} = -V_{PS}$ T_p (on), T_n (off) $v_A = +V_{PS}$

$v_{M_H} = +V_{PS}$ T_p (off), T_n (on) $v_A = -V_{PS}$

Inverting current amplifier

At the frequencies of the input signal, the equivalent LPF impedance should be sufficiently low (zero).

• The **conducting transistor can not be turned off instantaneously**; some time is necessary to turn off the transistor.

• There is a time interval when **both transistors are on**. A high current pulse flows between supply sources, through the conducting transistors.

• This (large) current pulse can lead to transistor failure.

Solution: The control signal for (off) ⟶ (on) must be delayed in comparison with the control signal for (on) ⟶ (off)

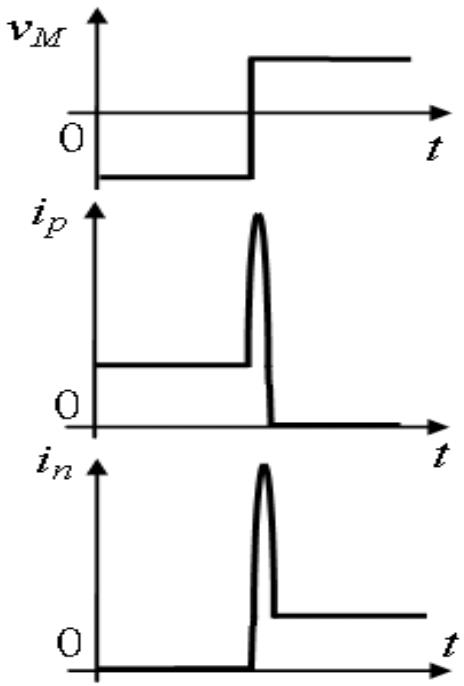

Current commutation for

T_P : (on) ⟶ (off)

T_n : (off) ⟶ (on)

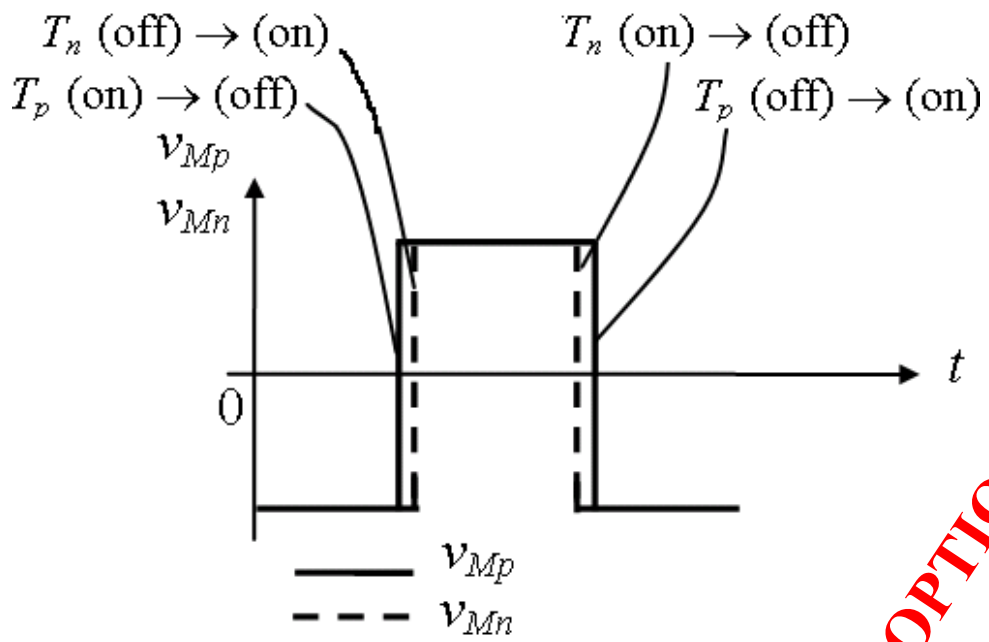

Control of the transistors using different control signals

OPTIONAL

Frequency Spectrum

The frequency spectrum of the pulse-width-modulated signals contains: input signal frequency (f_i), switching frequency (f_T), and harmonics:

$$f_i\ ,\ f_T,\ f_T \pm 2f_i,\ 2f_T \pm f_i,\ 2f_T \pm 3f_i$$

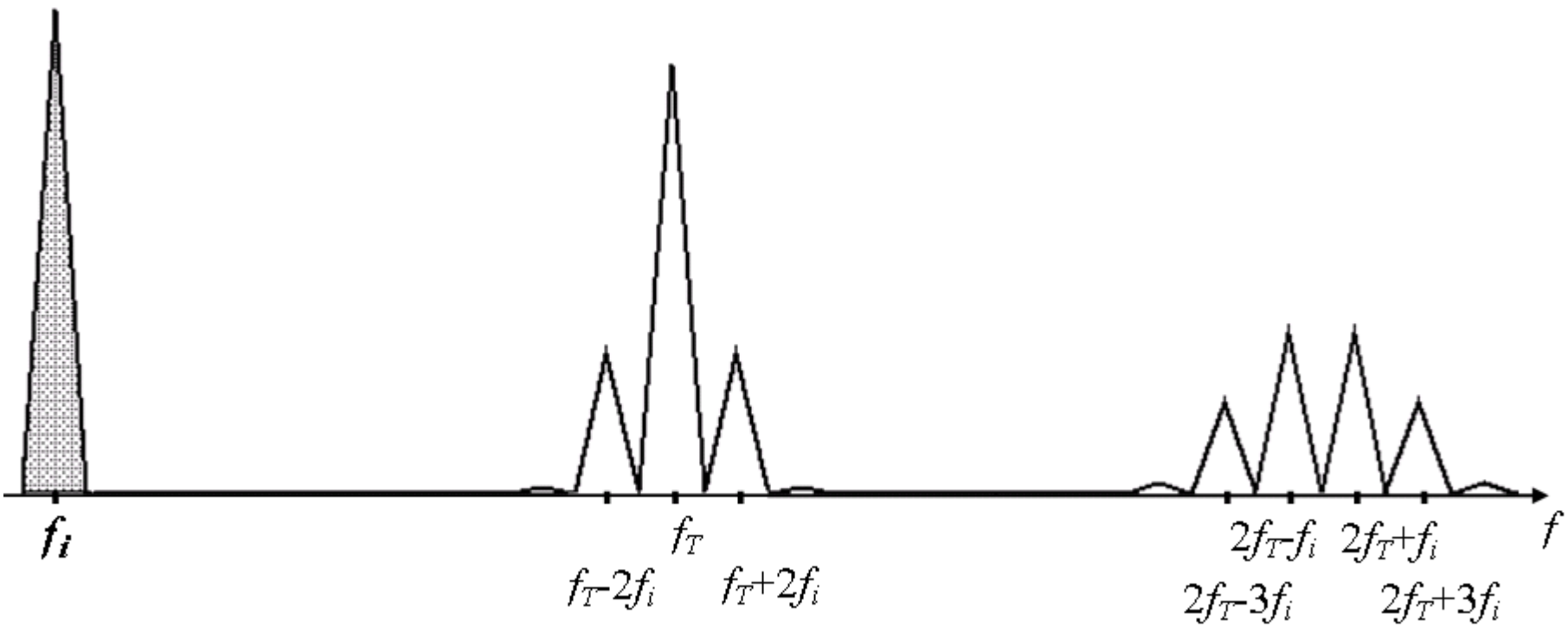

A LPF should be used to remove the switching frequency and harmonics, thus reconstructing the amplified signal

Low Pass Filter

A single stage, second order LC filter

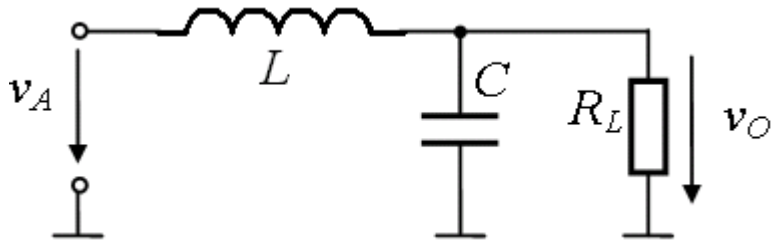

$$F(j\omega)=\frac{v_O(j\omega)}{v_I(j\omega)}=\frac{1}{1+j\omega LC\frac{1}{R_L C}+(j\omega)^2 LC}$$

$$\omega_0=\frac{1}{\sqrt{LC}}$$

$$Q=\omega_0 R_L C$$

$$F(j\omega)=\frac{1}{1+j\frac{\omega}{\omega_0}\frac{1}{Q}+\left(j\frac{\omega}{\omega_0}\right)^2}$$

$$f_0=\frac{1}{2\pi\sqrt{LC}}$$

Greater than the frequency of useful signal to avoid its attenuation

The filter should highly attenuate the f_T frequency

$f_0<(1/10)\,f_T$ For at least 40dB attenuation at f_T

Switching frequency should be at least 10 times greater than the maximum signal frequency.

Q=0.707 provides a frequency response that introduces -3dB at corner frequency.

Class D Power Amplifier - Example

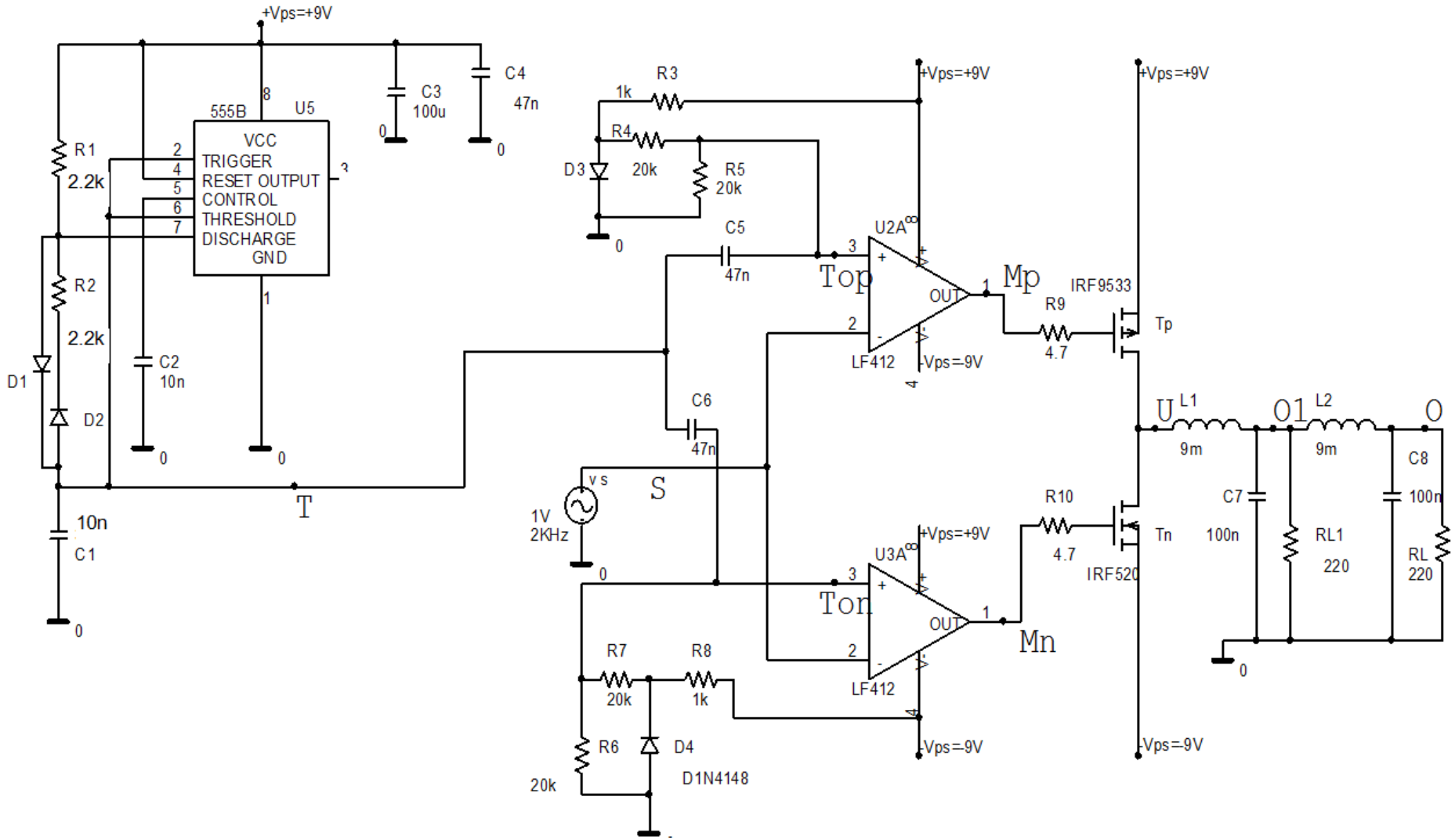

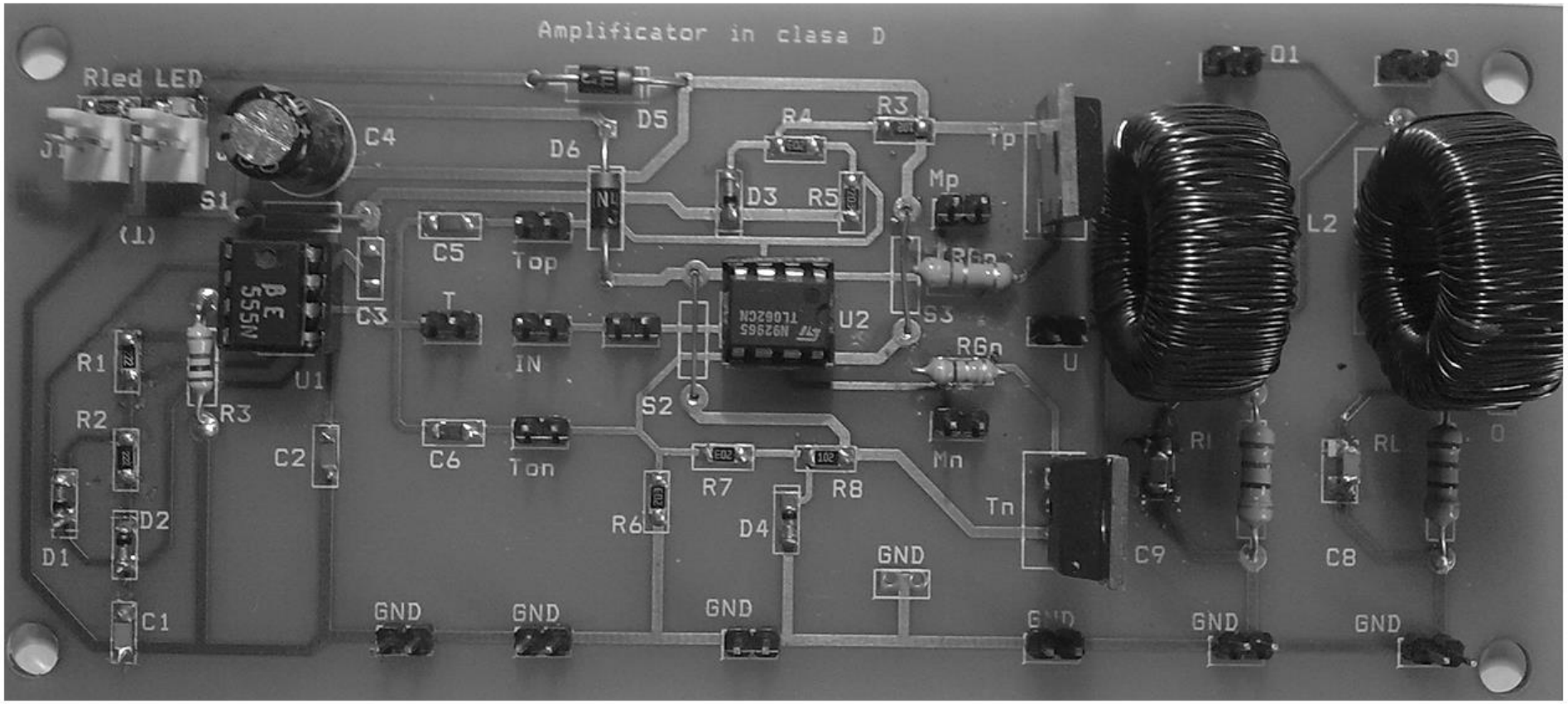
Amplificator in clasa D
Rled LED
J1
(1)
S1
C4
D5
D6
R4
R3
D3
R5
Tp
Mp
RGp
S3
U2
RGn
U
Mn
Tn
L2
D1
D
C5
Top
C3
T
IN
U1
R1
R2
R3
C2
C6
Ton
S2
R7
R8
R6
D4
D2
D1
C1
GND
GND
GND
GND
GND
GND
C9
C8
RI
RL

Specialised Integrated Circuits

- ***LX*1721/1722: Class-D Stereo Power Amplifier Controller**
  - controlere pentru amplificatoare audio în clasă D, stereo; conţine toate componentele pentru comanda tranzistoarelor etajului de putere.

- ***LX*1725 : 15W X 2 30W BTL CLASS-D AUDIO AMPLIFIER**
  - amplificator audio de putere în clasă D cu două canale. Poate fi utilizat atât ca amplificator stereo cât şi ca amplificator mono în configuraţie punte. Puterea maximă este de 15Wx2 (configuraţia stereo) şi 30W (punte), pe sarcină de 8Ω. Randamentul este de peste 90%. Etajul de putere (tranzistoare MOS) este integrat în circuit, în exterior se mai conectează doar filtrul *LC* şi difuzoarele. Principale aplicatii: televizoare, CD/DVD Combo Player, sisteme Home theater, sistem audio pentru calculatoare, etc.

- ***LX*1708: 15W+15W STEREO FILTERLESS CLASS-D AMPLIFIER**
  - amplificator audio CMOS in clasa D, 15Wx2 stereo ce nu necesită filtrare. Este optimizat pentru funcţionare cu eficienţă maximă la cost minim. Utilizează trei niveluri de modulare PWM, ceea ce permite eliminarea filtrului. Principale aplicaţii: televizoare, sisteme de navigare pentru automobile, sisteme audio pentru calculatoare, sisteme de sunet portabile, etc.