Frequency Response of Transistor Amplifiers

- **Frequency response of CS amplifier, qualitative analyses**
- **Quantitative analyses of frequency response for CS and CE amplifiers - optional**
- **Cascode amplifier - optional**

CS amplifier

medium frequency

Medium frequency small-signal equivalent circuit

Full circuit:

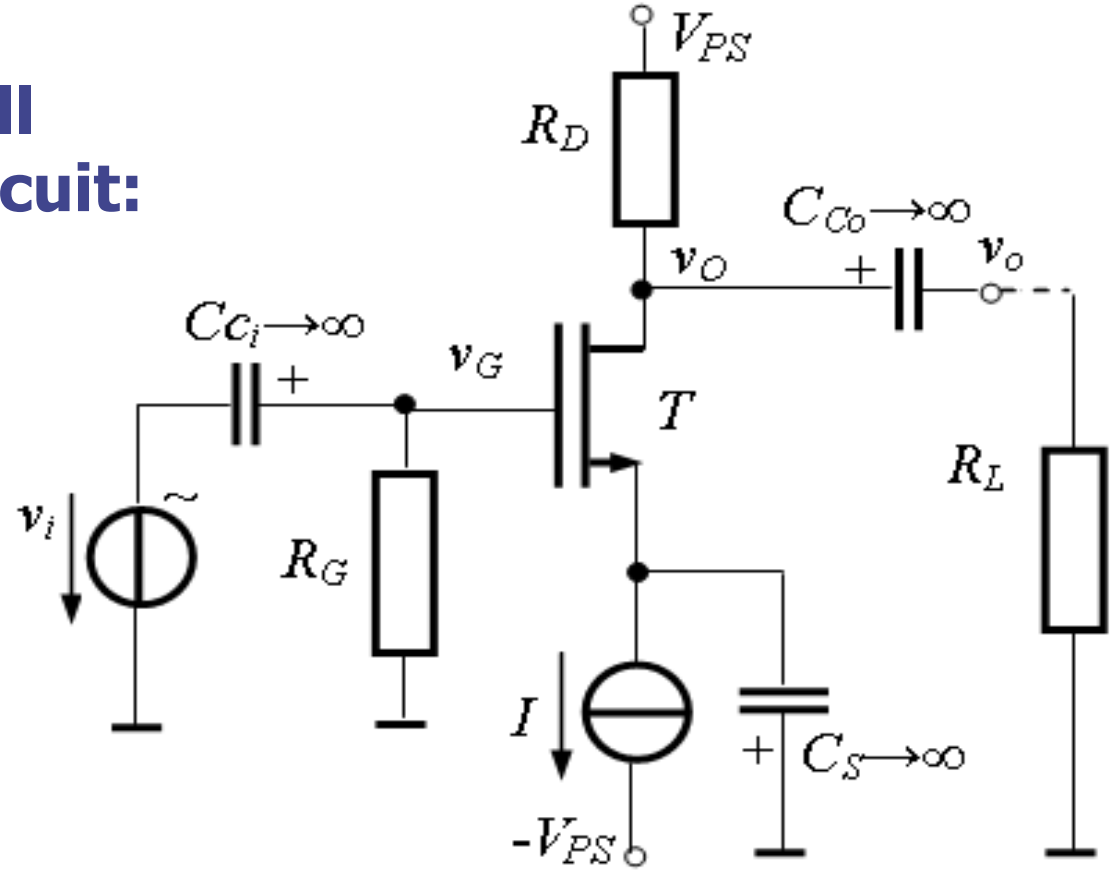

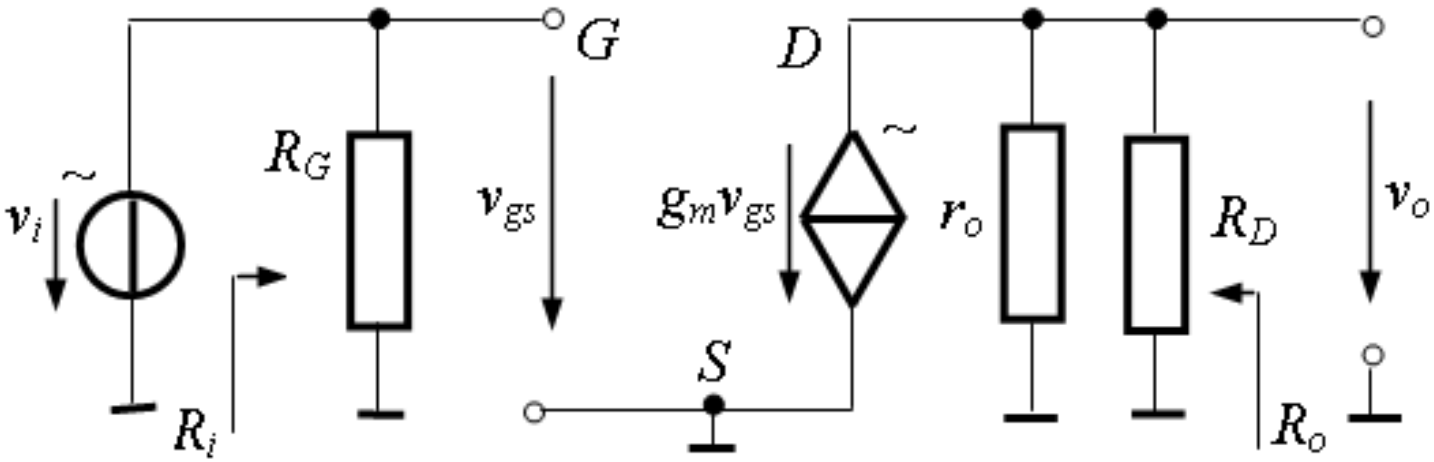

$$A_v \approx -g_m R_D$$

$$R_i = R_G$$

$$R_O = R_D \parallel r_o \approx R_D$$

Frequency response of transistor amplifiers

- **mid-frequency:**
  - coupling capacitors → short-circuits
  - internal parasitic capacitances → open-circuits

- **low-frequency:**
  - coupling capacitors → equivalent impedances
  - internal parasitic capacitances → open-circuits

- **high-frequency :**
  - coupling capacitors → short-circuits
  - internal parasitic capacitances → equivalent impedances

- *must be taken into consideration:*
  - output resistance of the signal source
  - load resistance

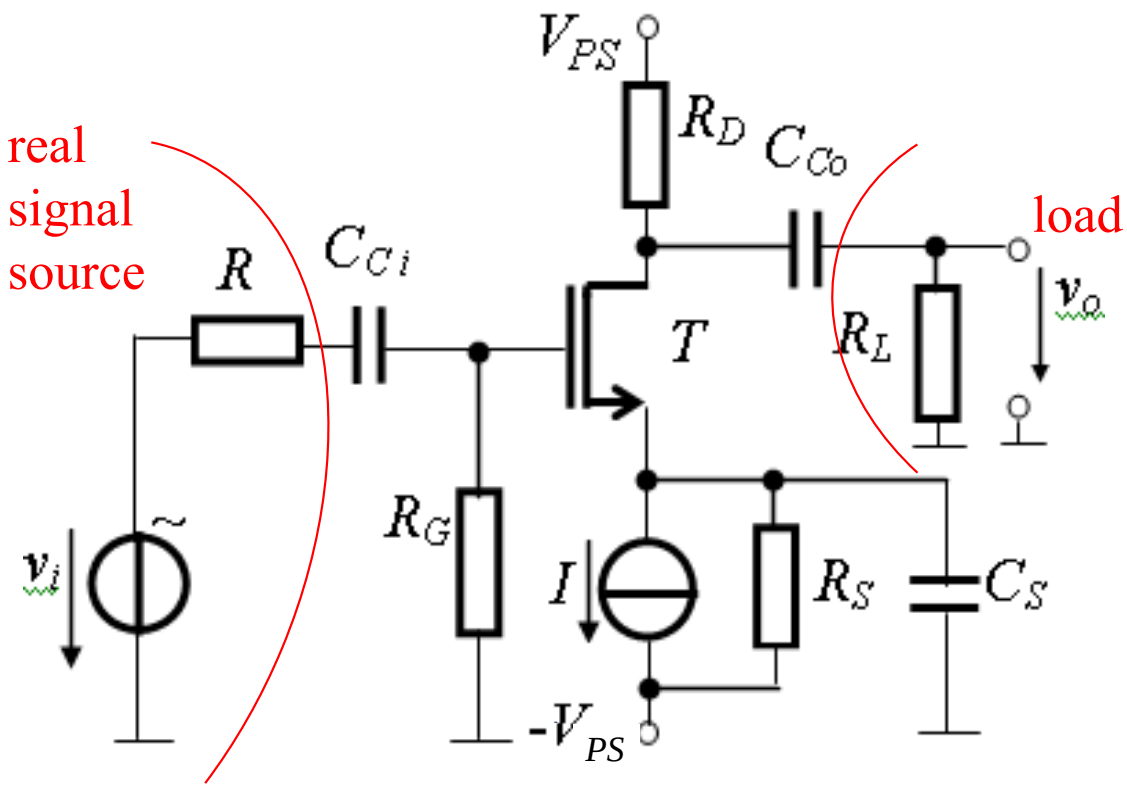

Mid-frequency

- No capacitors in the small- signal equivalent circuit
- Frequency **independent** behavior

$$\boxed{|A_v(j\omega)| = \text{cst}}$$

against frequency variations

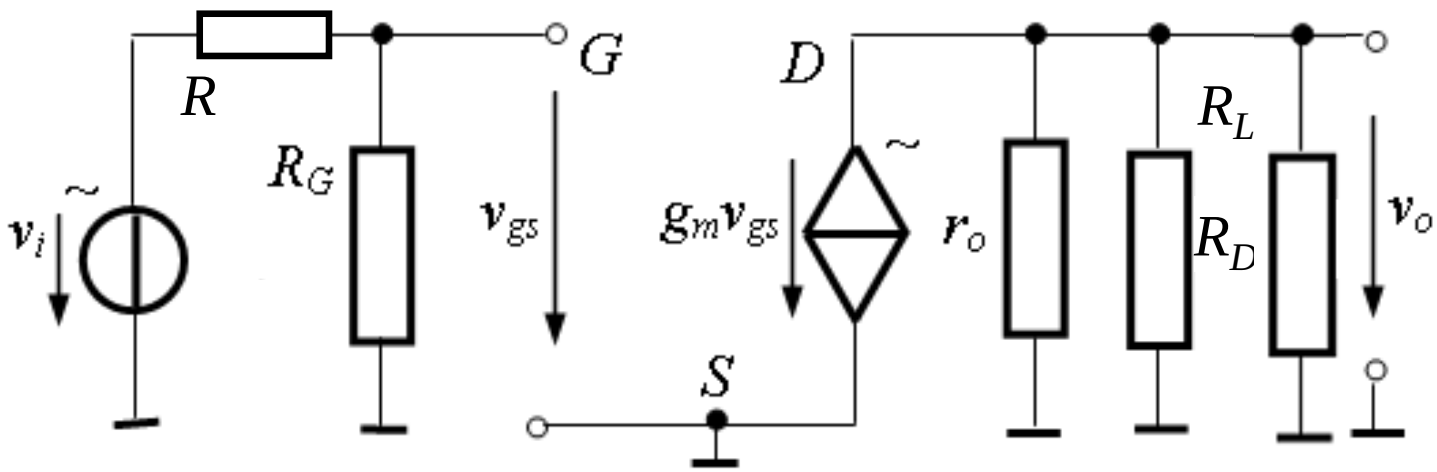

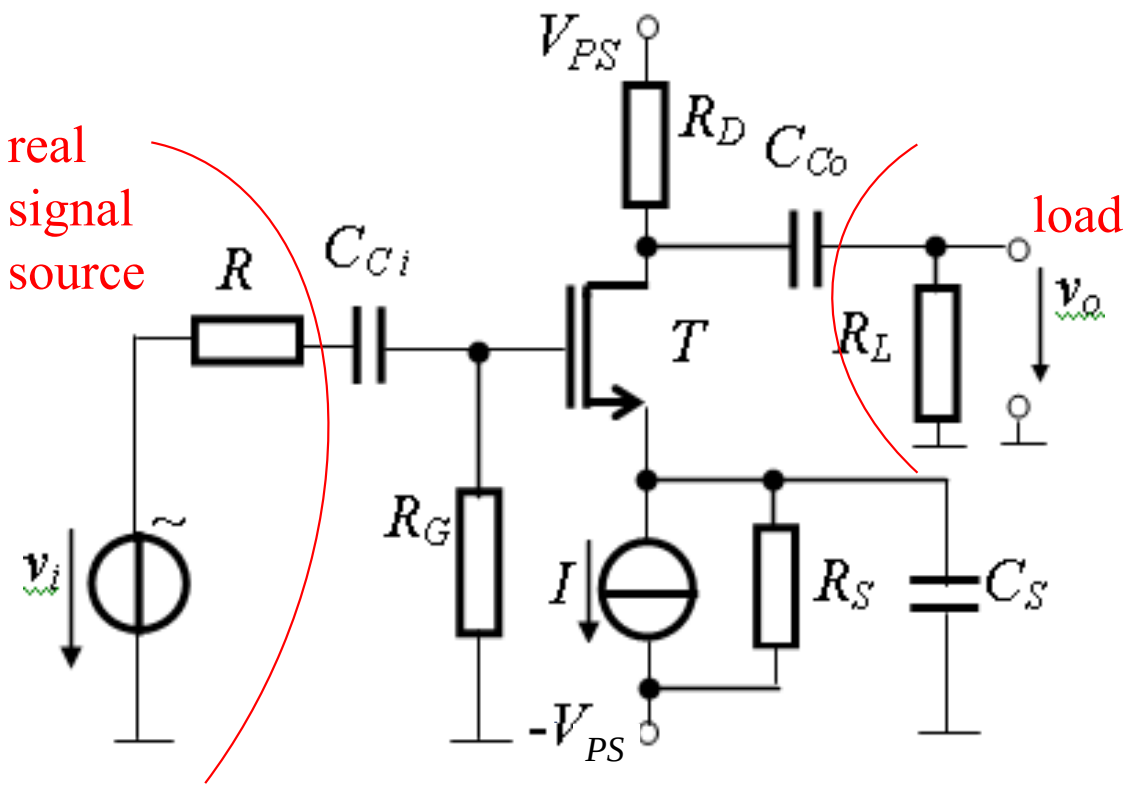

Low-frequency

- Coupling capacitors in the small-signal equivalent circuit
- Frequency **dependent** behavior
- **High pass type**

$$f \downarrow, \quad |A_v(j\omega)| \downarrow$$

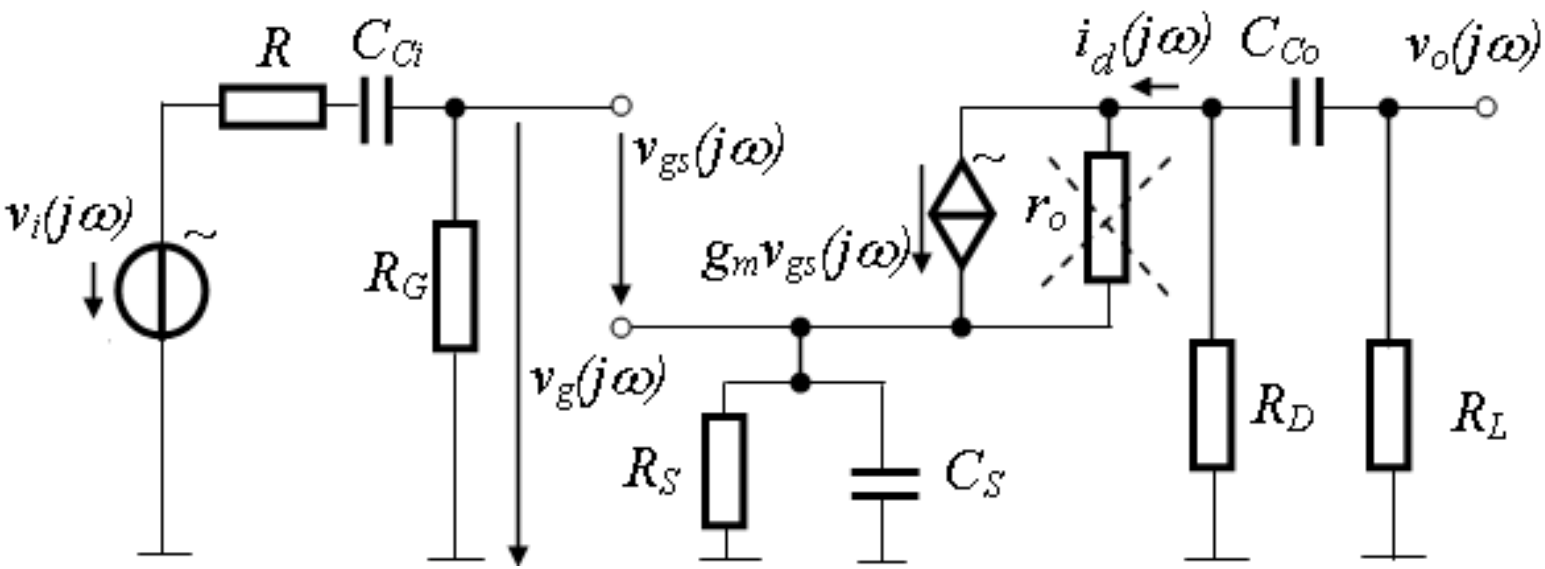

Sets the lower cutoff frequency f_L

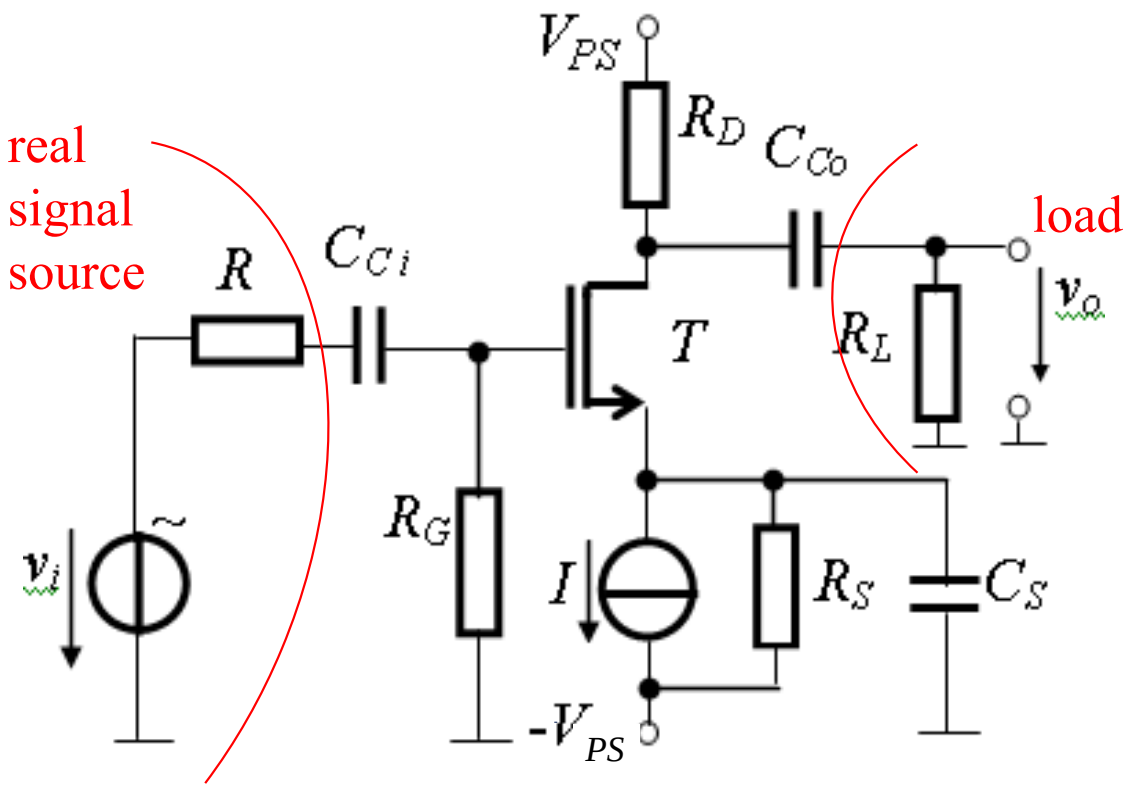

High-frequency

- Parasitic capacitors in the small-signal equivalent circuit
- Frequency **dependent** behavior
- **Low pass type**

$$f \uparrow, \quad |A_v(j\omega)| \downarrow$$

Sets the upper cutoff frequency f_H

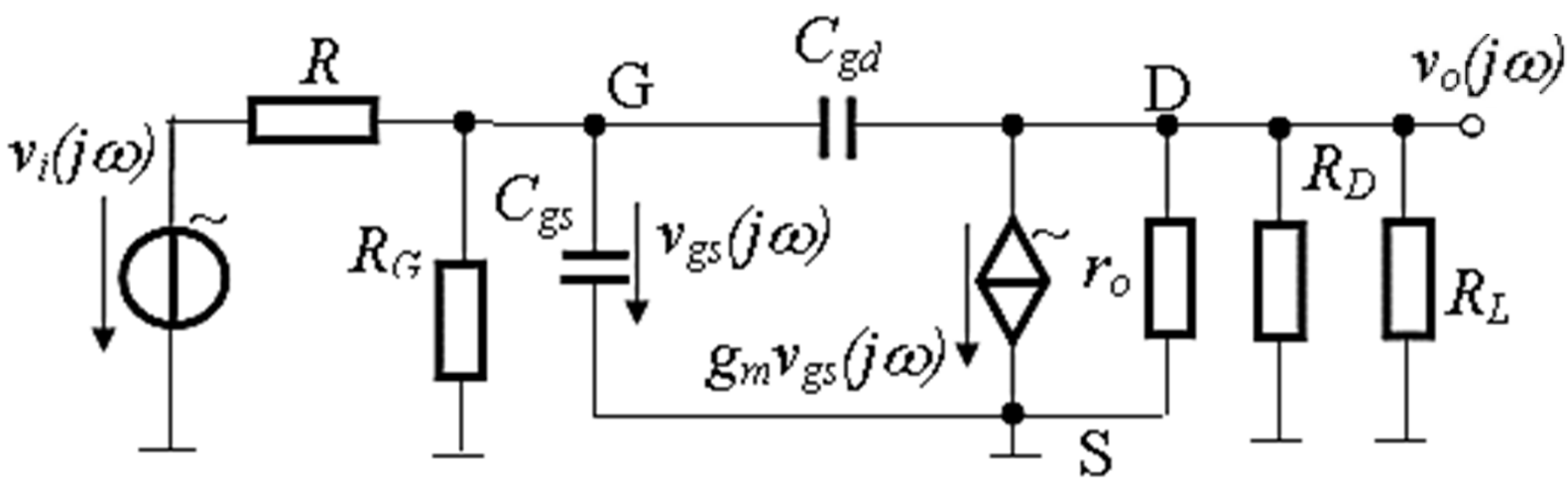

Frequency response

Band pass

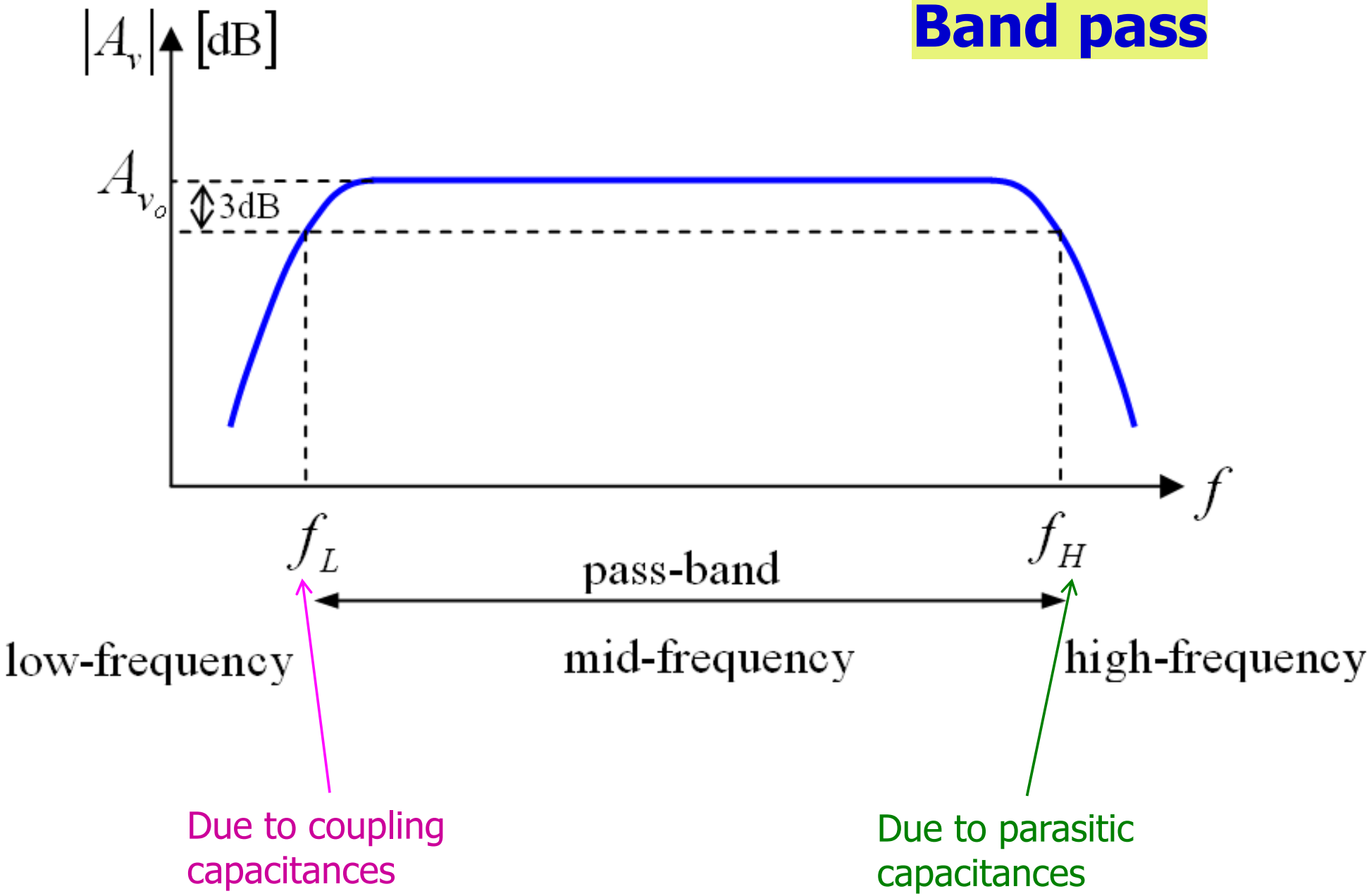

CS amplifier

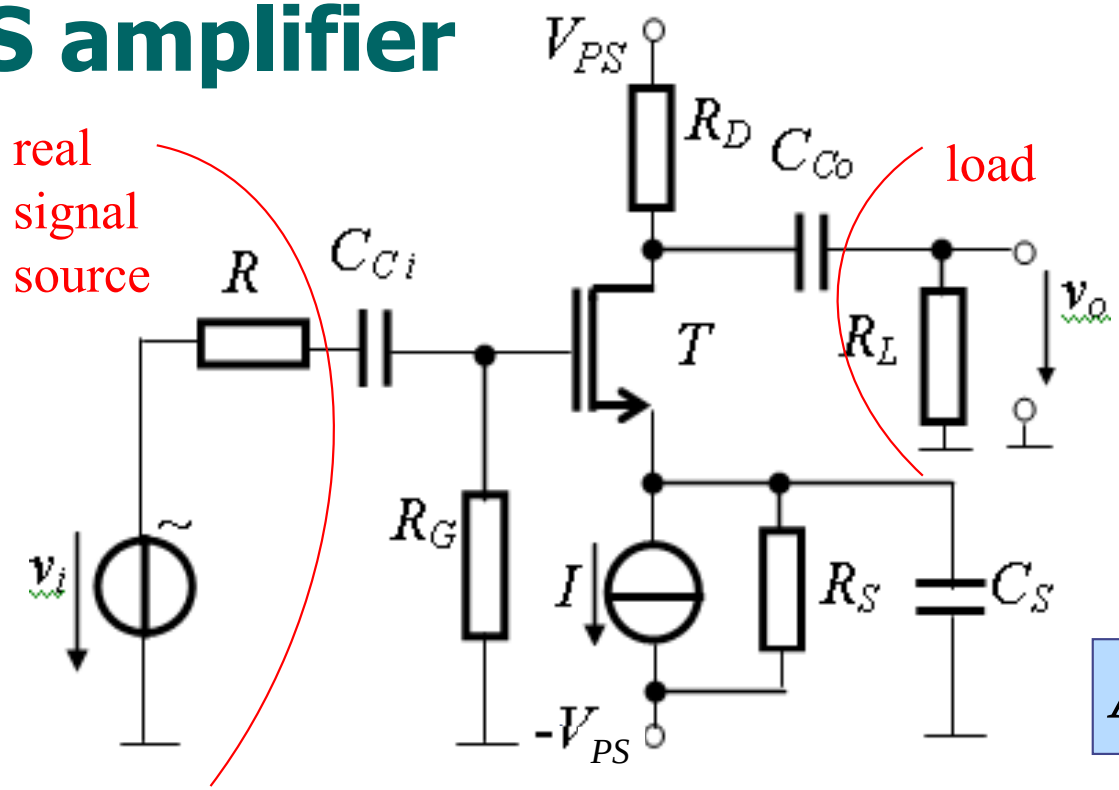

$$A_v(j\omega) = \frac{v_o(j\omega)}{v_i(j\omega)}$$

$$v_o(j\omega)=F_o(j\omega)\cdot i_d(j\omega);$$

$$i_d(j\omega)=F_s(j\omega)\cdot v_g(j\omega);$$

$$v_g(j\omega)=F_i(j\omega)\cdot v_i(j\omega);$$

$$A_v = F_i(j\omega)\cdot F_s(j\omega)\cdot F_o(j\omega)$$

- **Analysis in the low-frequency range**

Optional

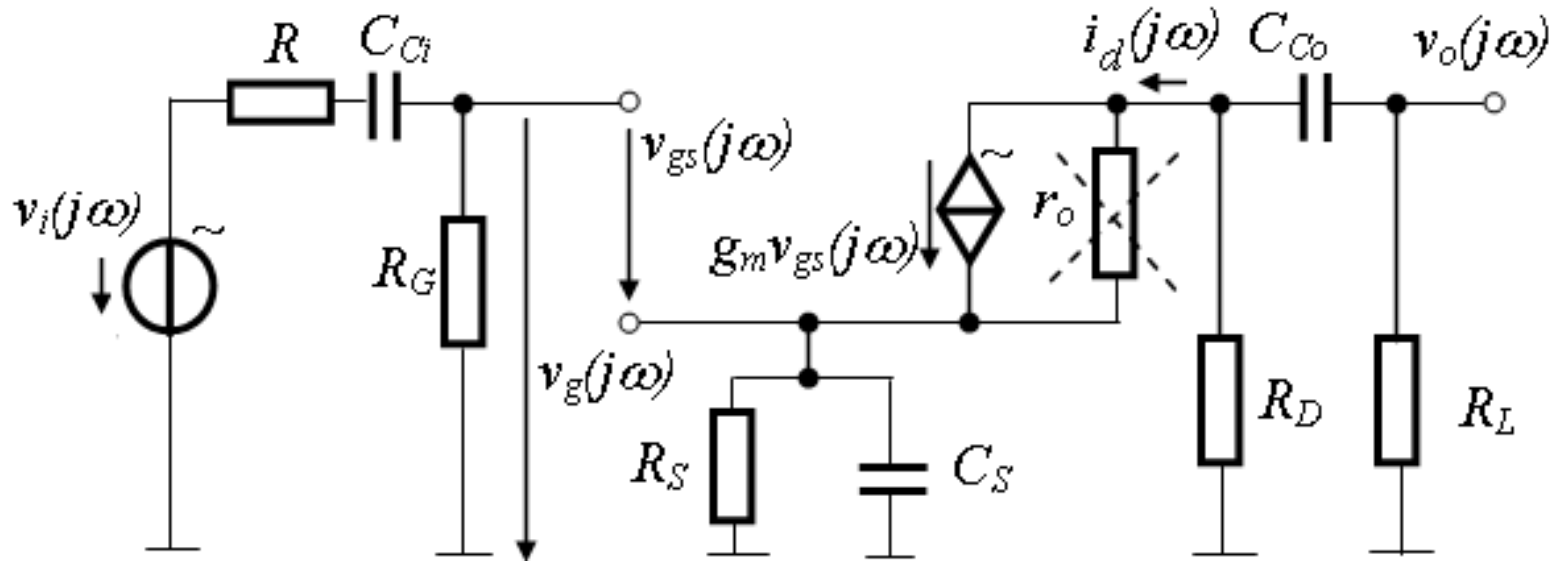

Analysis in low-frequency range

Optional

$$F_i(j\omega)=\frac{v_g(j\omega)}{v_i(j\omega)}$$

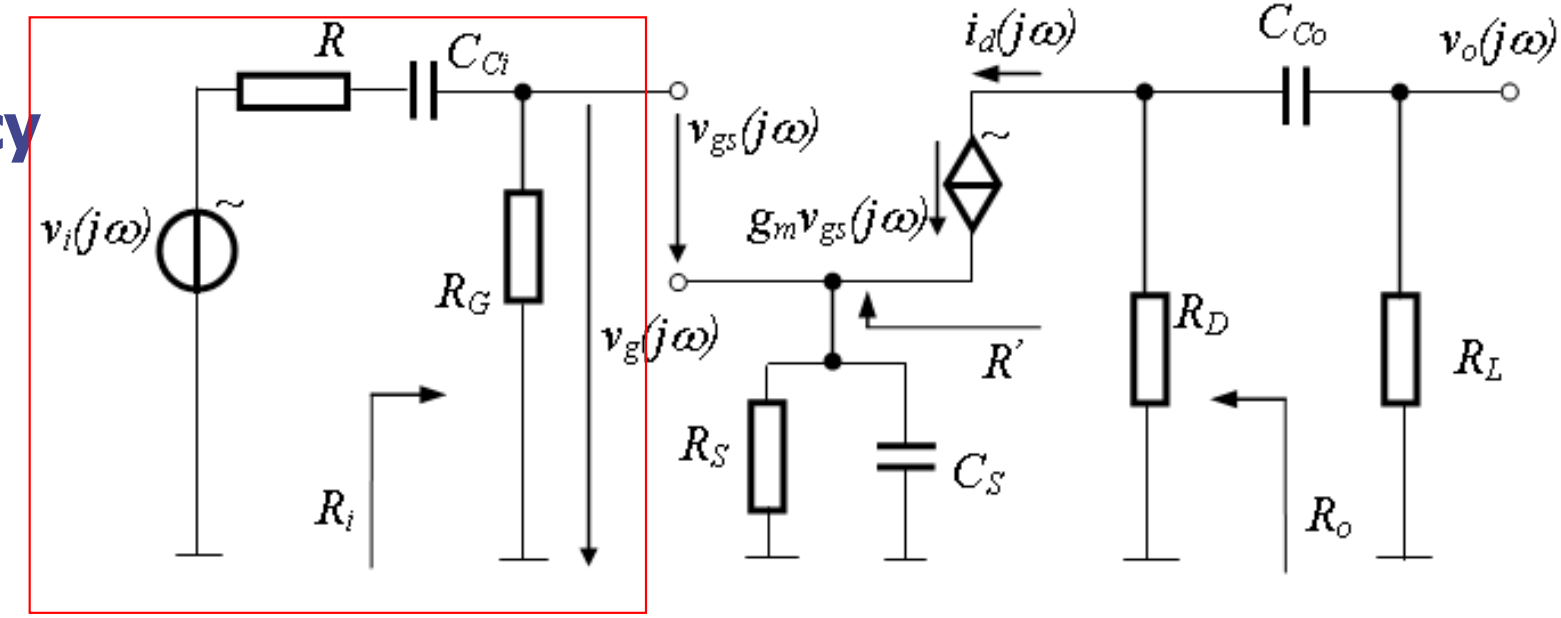

$$F_i(j\omega)=\frac{j\omega R_G C_{C_i}}{1+j\omega(R+R_G)C_{C_i}}$$

HPF, introduces a pole at the frequency

$$f_{Li}=\frac{1}{2\pi(R+R_G)C_{Ci}}$$

Frequency of the pole: **C_{Ci} multiplied by the total resistance seen by C_{Ci}**

Generalization:

$$f_{Li}=\frac{1}{2\pi(R+R_i)C_{Ci}}$$

Analysis in low-frequency range

$$F_s(j\omega)=\frac{i_d(j\omega)}{v_g(j\omega)}$$

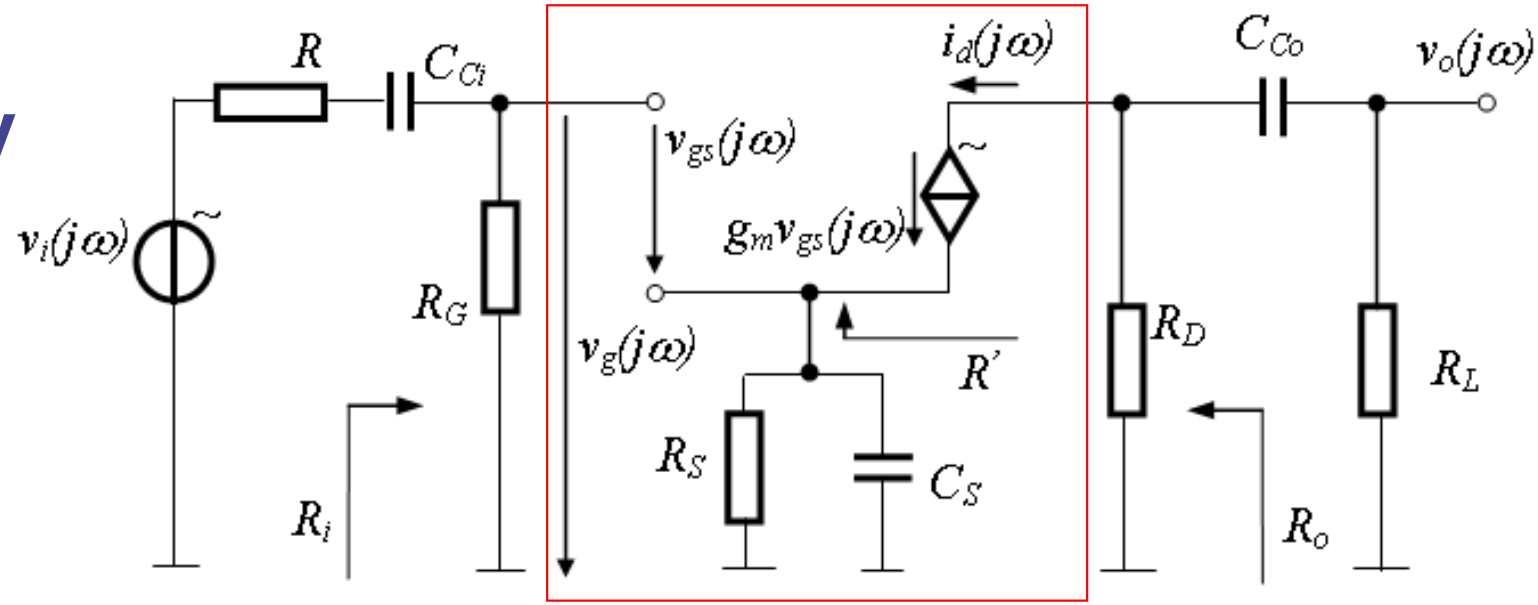

$$i_d(j\omega)=g_m v_{gs}(j\omega)$$

$$v_g(j\omega)=v_{gs}(j\omega)+g_m v_{gs}(j\omega)\left(R_S \parallel \frac{1}{j\omega C_S}\right)$$

$$f_{Ls}=\frac{1}{2\pi\left(\frac{1}{g_m}\parallel R_S\right)C_S}$$

Frequency of the pole: **C_S multiplied by the total resistance seen by C_S**

Generalization:

$$f_{Ls}=\frac{1}{2\pi\left(R' \parallel R_S\right)C_S}$$

Optional

Analysis in low-frequency range

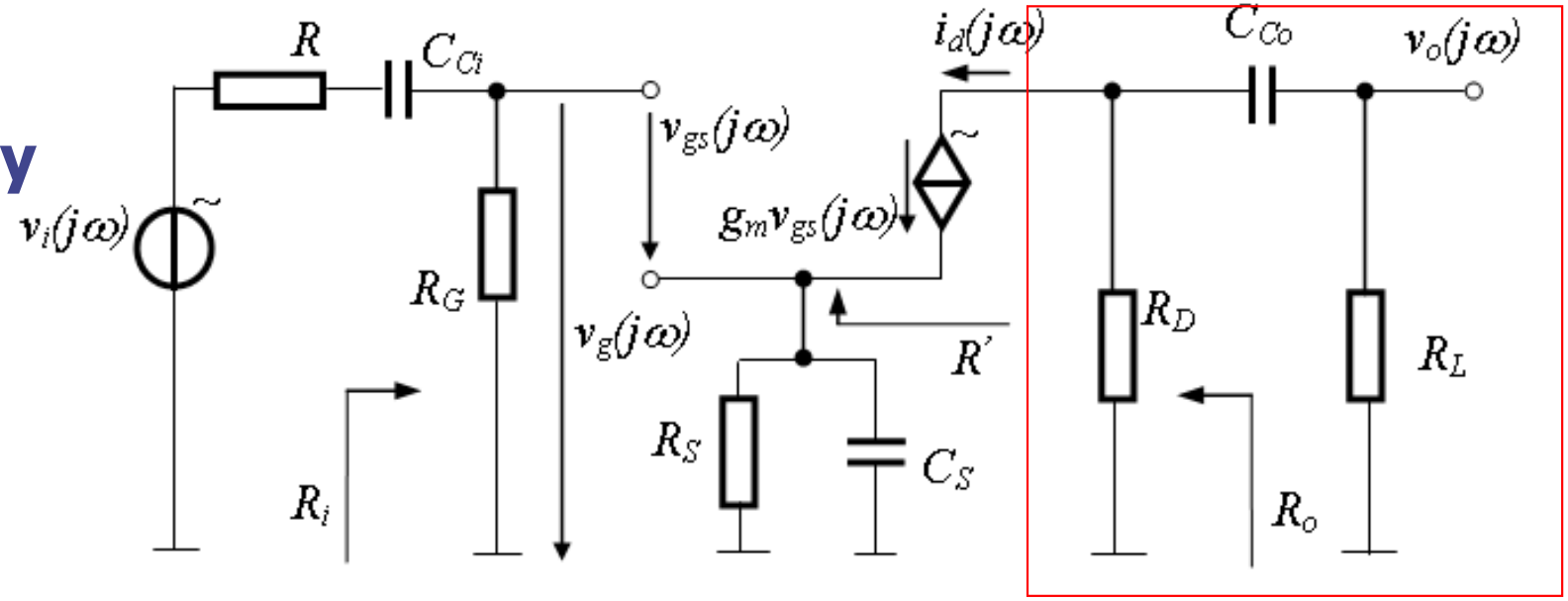

$$F_o(j\omega) = \frac{v_o(j\omega)}{i_d(j\omega)}$$

$$f_{Lo} = \frac{1}{2\pi(R_D + R_L)C_{Co}}$$

Frequency of the pole: C_{Co} multiplied by the total resistance seen by C_{Co}

Generalization:

$$f_{Lo} = \frac{1}{2\pi(R_o + R_L)C_{Co}}$$

Optional

- **Dominant pole**: the greater break frequency between f_{Li}, f_{Ls}, f_{Lo} if the nearest pole or zero will be at least a decade away.
- usually given by f_{Ls}, for equal coupling capacitances

➢ Analysis in the high-frequency range

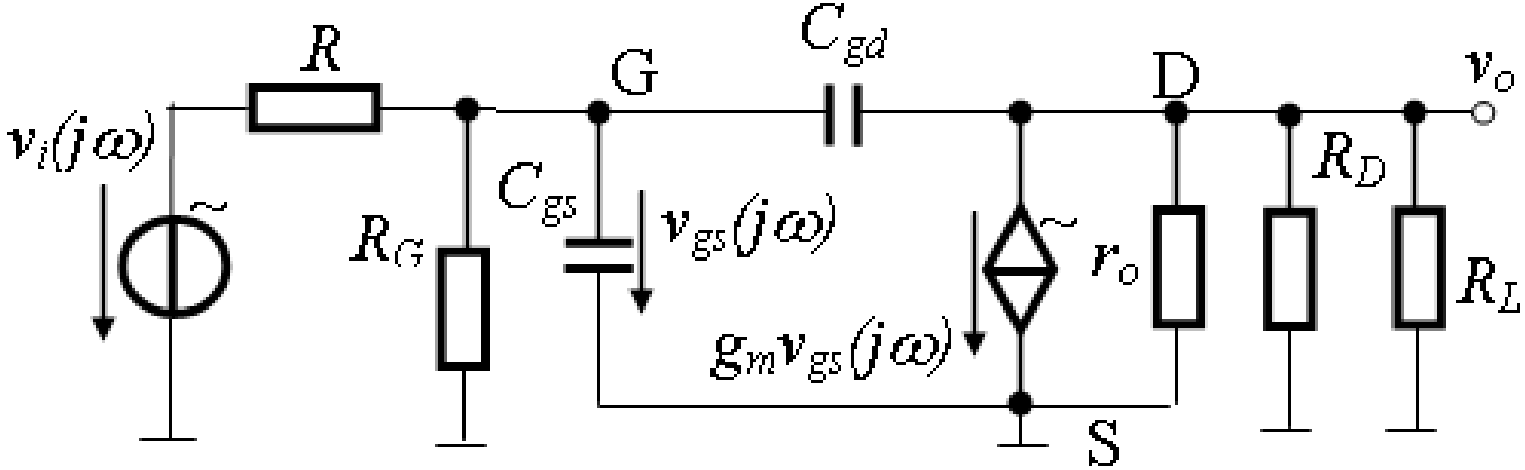

C_{ds} is not shown here because it generates a pole at a much higher frequency that the one generated by C_{gs} and C_{gd}

$\boldsymbol{C_{gd}}$ is reflected to the input according to <u>*Miller's theorem*</u>

$$\boxed{C_{gd,\text{ech}} = (1 - a_v) C_{gd}}$$

$$a_v = -g_m R_L' = -g_m (R_L \,||\, R_D \,||\, r_o)$$

Optional

$$\boxed{C_{gd,\text{ech}} = (1 + g_m R'_L) C_{gd}}$$

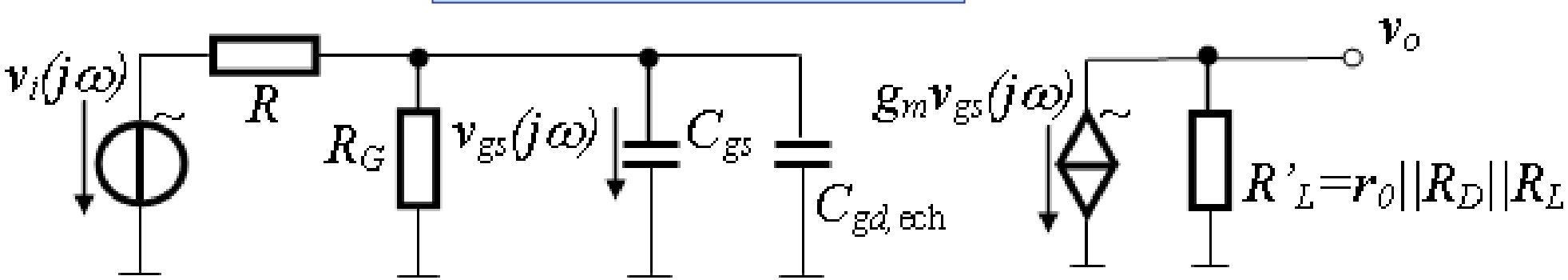

➢ Analysis in the high-frequency range

Optional

$$C_i = C_{gs} + C_{gd,\text{ech}} = C_{gs} + (1 + g_m R'_L) C_{gd}$$

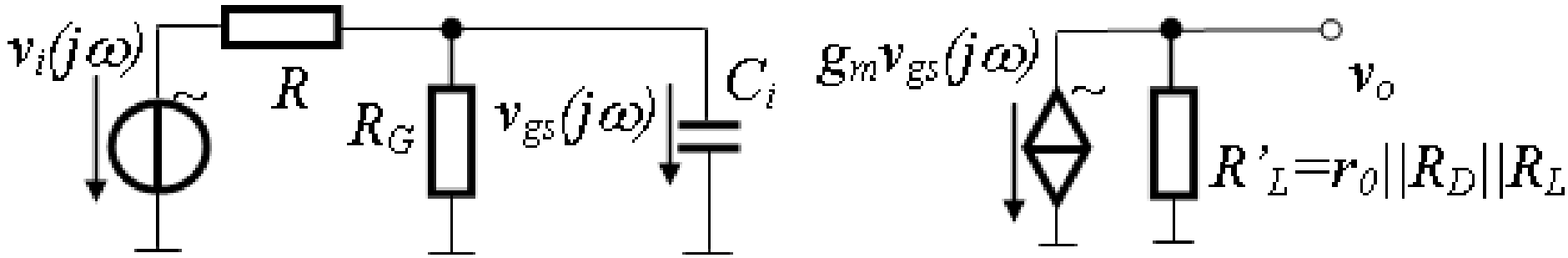

$$A_v(j\omega) = \frac{v_o(j\omega)}{v_i(j\omega)} = -\frac{R_G}{R + R_G} g_m R'_L \frac{1}{1 + j\omega (R \parallel R_G) C_i}$$

$$A_{vo} = -\frac{R_G}{R + R_G} g_m R'_L$$

$$f_H = \frac{1}{2\pi (R \parallel R_G) C_i}$$

$$f_H = \frac{1}{2\pi (R \parallel R_i) C_i}$$

Numerical example

Optional

$C_{Ci}=C_{Co}=C_s=10\mu F$, $R=20K\Omega$, $R_G=2M\Omega$, $R_D=10k\Omega$, $R_L=20k\Omega$, $R_s=10K\Omega$, $I=400\mu A$.

$K=100\mu A/V^2$, $(W/L)=18$, $V_A=100V$. $C_{gs}=C_{gd}=1pF$ @ $I=400\mu A$

Solution: $g_m = 1.2mS$ $r_o = 250\,K\Omega$

$$f_{Li} = \frac{1}{2\pi(R+R_G)C_{Ci}} = \frac{1}{2\pi(20+2000)10^3\cdot 10\cdot 10^{-6}} \cong 8\,mHz$$

$$f_{Ls} = \frac{1}{2\pi\left(\frac{1}{g_m}\parallel R_S\right)C_S} = \frac{1}{2\pi\left(\frac{1}{1{,}2}\parallel 10\right)10^3\cdot 10\cdot 10^{-6}} \cong 21\,Hz$$

$$f_{Lo} = \frac{1}{2\pi(R_D+R_D)} = \frac{1}{2\pi(10+20)10^3\cdot 10\cdot 10^{-6}} \cong 0.5\,Hz$$

f_L=21Hz

The output resistance of the signal source R does not affect f_{Li} but affects f_H

$$A_{vo} = -\frac{R_G}{R+R_G} g_m R_L' = -\frac{2}{0.02+2} \cdot 1.2 \cdot 6.5 = -7.7$$

Optional

$$\left|A_{vo}\right|_{\text{dB}} = 20\log(7.7) = 17.7$$

$$C_i = C_{gs} + \left[1 + g_m\left(r_o \parallel R_D \parallel R_L\right)\right]C_{gd} = 1 + \left[1 + 1.2\left(250 \parallel 10 \parallel 20\right)\right]\cdot 1 \cong 9.8\text{pF}$$

$$f_H = \frac{1}{2\pi\left(R \parallel R_G\right)C_i} = \frac{1}{2\pi\left(20 \parallel 2000\right)\cdot 10^3 \cdot 9{,}8 \cdot 10^{-12}} = \underline{820\,\text{KHz}}$$

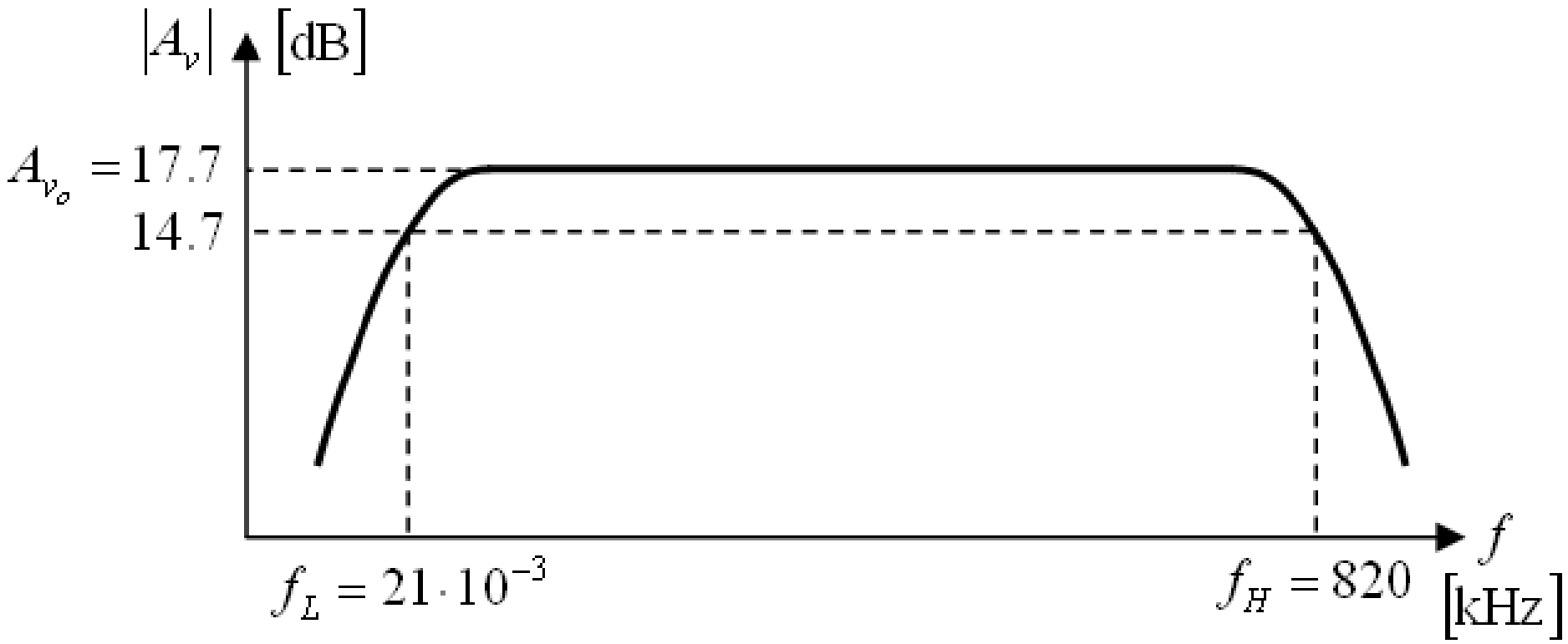

CE amplifier

Optional

- **Analysis in the low-frequency range**

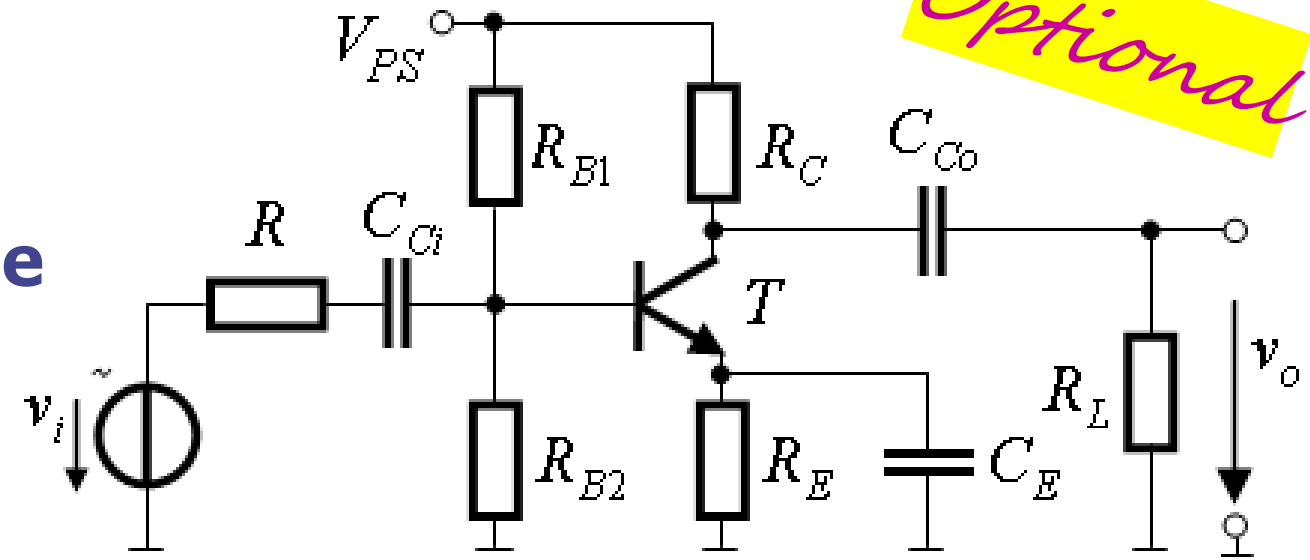

The effect of each capacitor is analyzed considering the other two capacitors with infinite capacity (zero equivalent impedance)

$$f_{Li} = \frac{1}{2\pi(R + R_i)C_{Ci}} = \frac{1}{2\pi(R + R_B \parallel r_{be})C_{Ci}}$$

$$R_B = R_{B1} \parallel R_{B2}$$

$$f_{Le} = \frac{1}{2\pi\left(R' \parallel R_E\right)C_E} = \frac{1}{2\pi R'_E C_E};$$

$$R'_E = R_E \parallel R' = R_E \parallel \frac{r_{be} + R_B \parallel R}{\beta + 1}$$

$$f_{Lo} = \frac{1}{2\pi(R_O + R_L)C_{Co}} = \frac{1}{2\pi(R_C + R_L)C_{Co}}$$

➢ Analysis in the high-frequency range

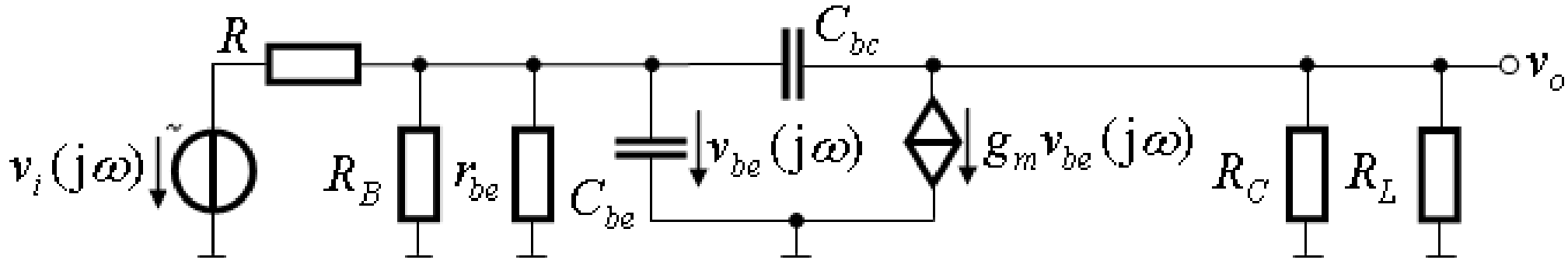

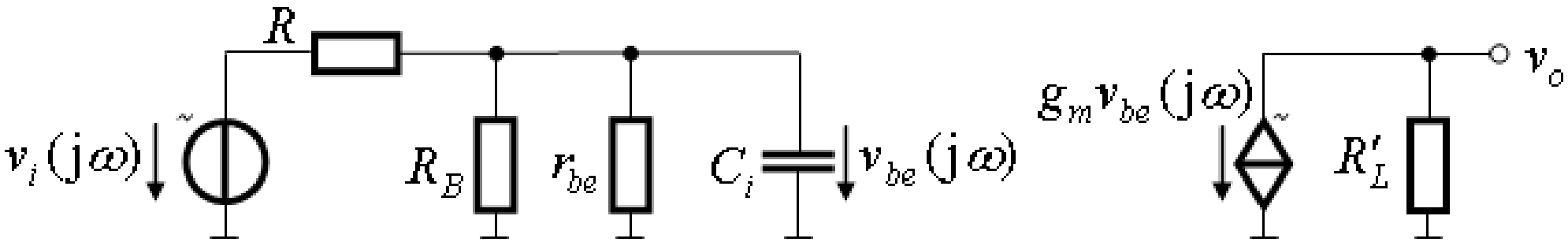

$$A_v(j\omega) = \frac{R_B \parallel r_{be}}{R + R_B \parallel r_{be}} g_m (R_C \parallel R_L) \frac{1}{1 + j\omega R'_i C_i}$$

Optional

$$C_i = C_{be} + (1 + g_m R'_L) C_{bc} \qquad R'_i = r_{be} \parallel R_B \parallel R$$

$$A_{vo} = \frac{R_B \parallel r_{be}}{R + R_B \parallel r_{be}} g_m (R_C \parallel R_L)$$

$$\boxed{f_H = \frac{1}{2\pi (r_{be} \parallel R_B \parallel R) C_i}}$$

Cascode amplifiers

- for the CS and CE amplifiers the magnitude of the gain and the bandwidth are in inverse ratio due to Miller's effect
- when the gain increases, the parasitic capacitance reflected to the input also increases, so the high breaking frequency decreases

Optional

$$A_{vo} = -\frac{R_G}{R + R_G} g_m R'_L$$

$$f_H = \frac{1}{2\pi (R \parallel R_i)\left(C_{gs} + (1 + g_m R'_L) C_{gd}\right)}$$

- to reduce the multiplication effect of the parasitic capacitance it is often use the ***cascode configuration***:
  - connection of a CS (CE) amplifier followed by a CG (CB) amplifier
- a technique to build wideband amplifiers

The cascode configuration with MOSFET

Optional

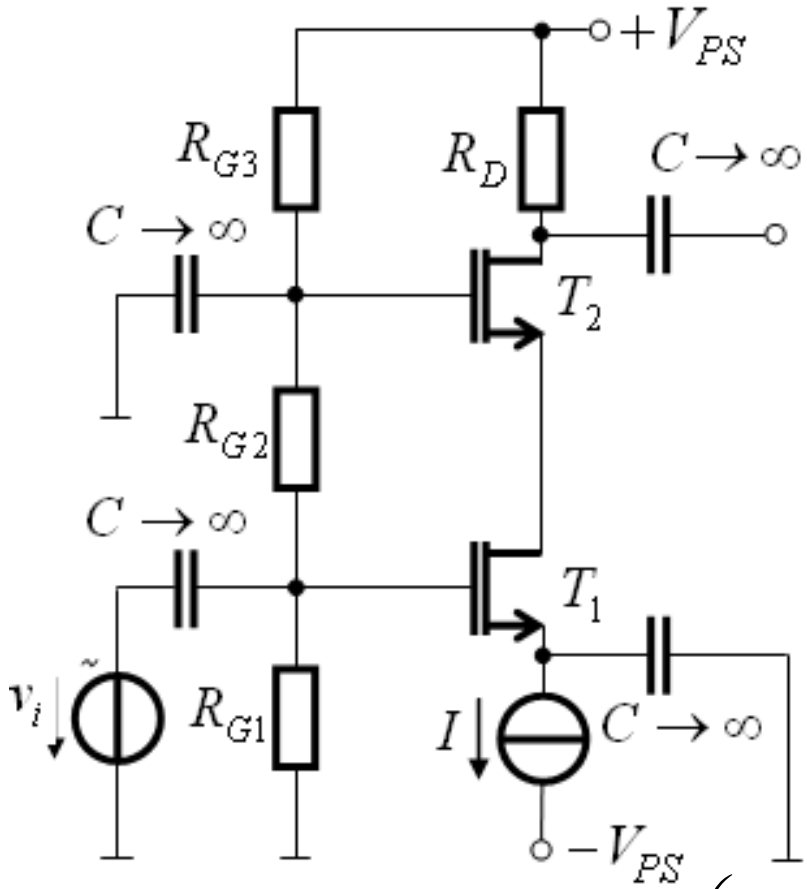

medium frequency

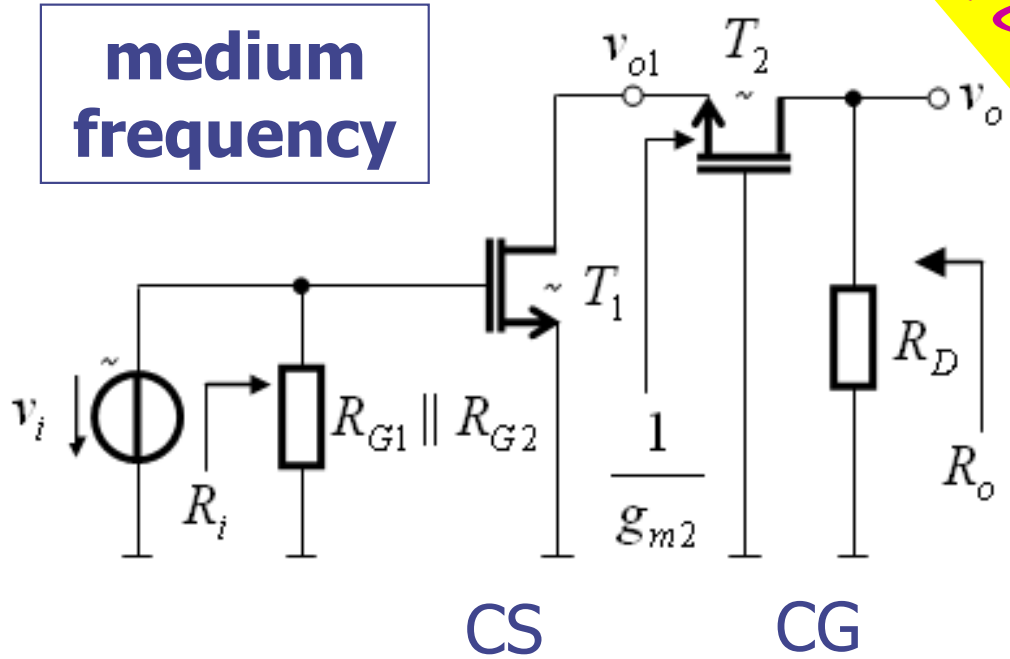

$$A_{v2} = \frac{v_o}{v_{o_1}} \approx g_{m2} R_D = g_m R_D$$

$$A_{v1} = \frac{v_{o1}}{v_i} = -g_{m1}\left(r_{o1} \parallel \frac{1}{g_{m2}}\right)$$

$$A_v = A_{v1} \cdot A_{v2}$$

$$\boxed{A_v = -g_m R_D}$$

$$\frac{1}{g_{m2}} << r_{o1}$$ same current through T_1, T_2

$$R_i = R_{G1} \parallel R_{G2} = R_G$$

$$g_m = g_{m1} = g_{m2}$$

$$\boxed{A_{v1} \cong -1}$$

$$R_o = R_D \parallel (r_{o1} + r_{o2} + g_{m2} r_{o1} r_{o2}) \approx R_D$$

High frequency

Optional

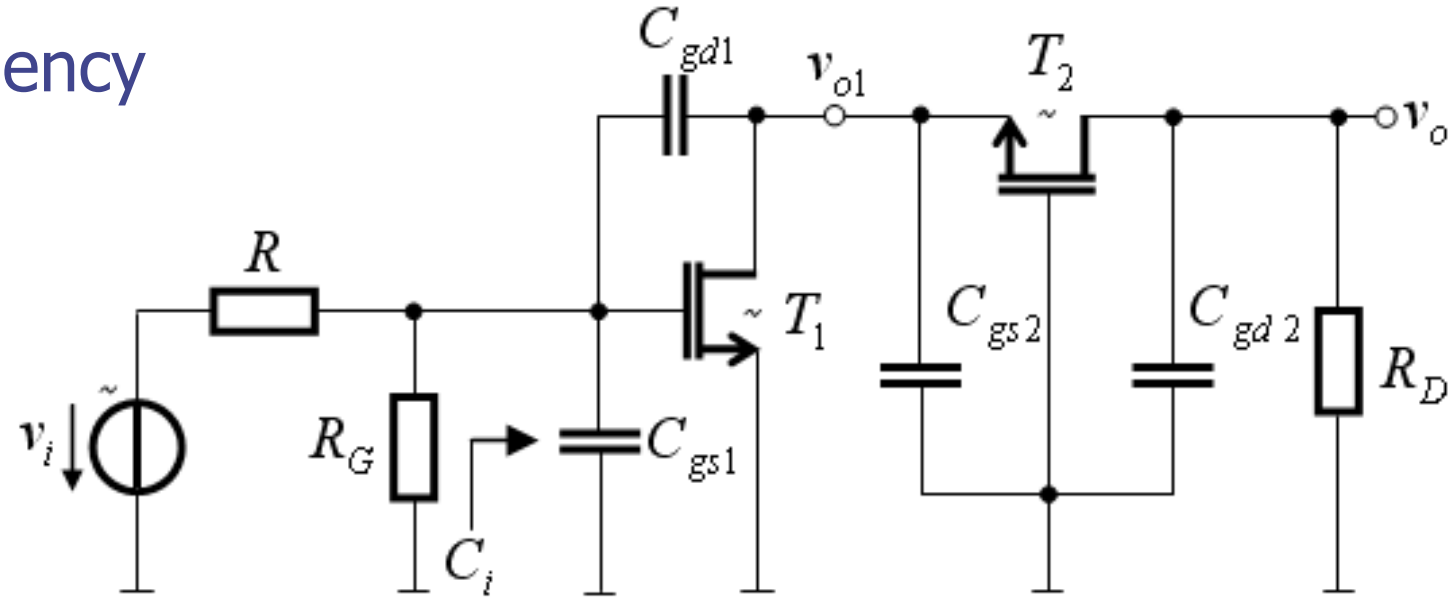

$$C_i = C_{gs1} + (1 - A_{v1})C_{gd1} = C_{gs1} + 2C_{gd1}$$

The multiplication factor of C_{gd1} is 2, considerable smaller that the one in CS configuration $(1 + g_m R_2')$. The value for C_i results much more reduced, that leads to a much higher value of the high cutoff frequency:

$$\boxed{f_H = \frac{1}{2\pi(R \,||\, R_G)C_i}}$$

- the other two poles due to C_{gs2} and C_{gd2} results to considerable higher frequency than f_H
- *C_i introduces the dominant pole at high frequency and determines the pass-band of the amplifier*

Numerical illustration

$$R_{G1} = R_{G2} = 4\text{M}\Omega \qquad R_D = 10\text{K}\Omega$$

$$R = 20\text{K}\Omega \qquad R_L = 20\text{K}\Omega$$

$$I = 400\mu\text{A}$$

$$(W/L) = 18 \qquad V_A = 100\text{V}$$

$$K = 100\,\frac{\mu\text{A}}{\text{V}^2}$$

$$C_{gs} = C_{gd} = 1\text{pF}$$

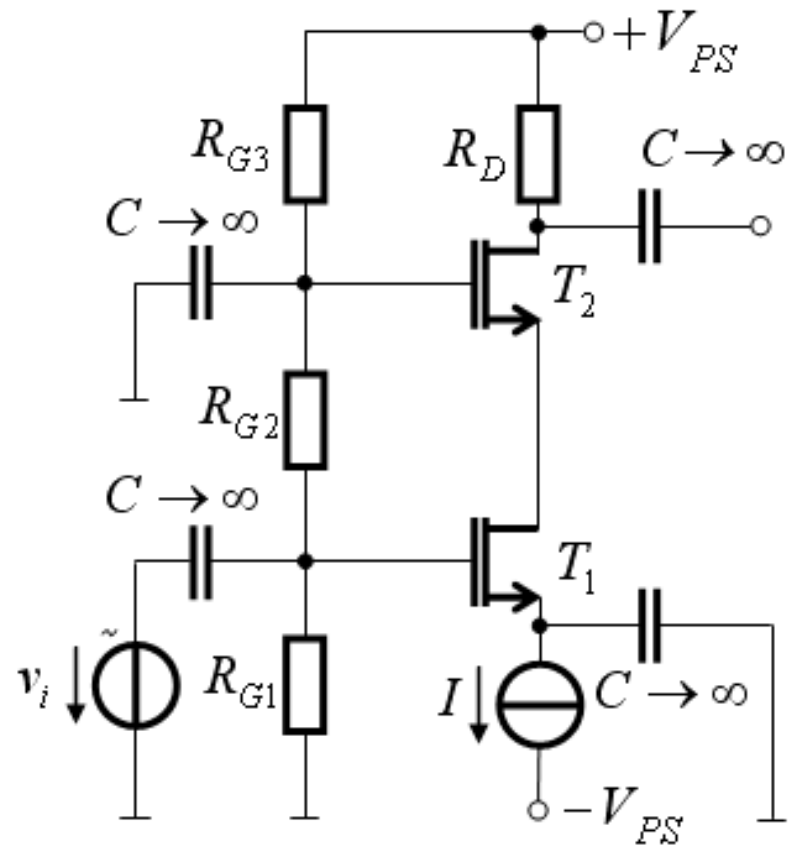

Optional

$$g_m = \sqrt{2K}\sqrt{\frac{W}{L}}\sqrt{I} = \sqrt{2\cdot 100}\cdot\sqrt{18}\cdot\sqrt{400} = 1200\ \mu\text{S} = 1.2\ \text{mS}$$

$$R_G = R_{G1} \parallel R_{G2} = 4 \parallel 4 = 2\ \text{M}\Omega$$

$$A_v = \frac{R}{R+R_G}\left[-g_m(R_D \parallel R_L)\right] = -\frac{20}{20+2000}\cdot 1{,}2\cdot(10 \parallel 20) = -7.9$$

$$C_i = C_{gs} + 2C_{gd} = 1 + 2\cdot 1 = 3\ \text{pF}$$

$$f_H = \frac{1}{2\pi(R \parallel R_G)C_i} = \frac{1}{2\pi(20 \parallel 2000)\cdot 10^3\cdot 3\cdot 10^{-12}} \cong 2.7\ \text{MHz}$$

The cascode configuration with BJT

Optional

For identical T_1 and T_2 transistors

$$R_B = R_{B1} \parallel R_{B2}$$
$$r_{be} = r_{be1} = r_{be2}$$
$$g_m = g_{m1} = g_{m2}$$

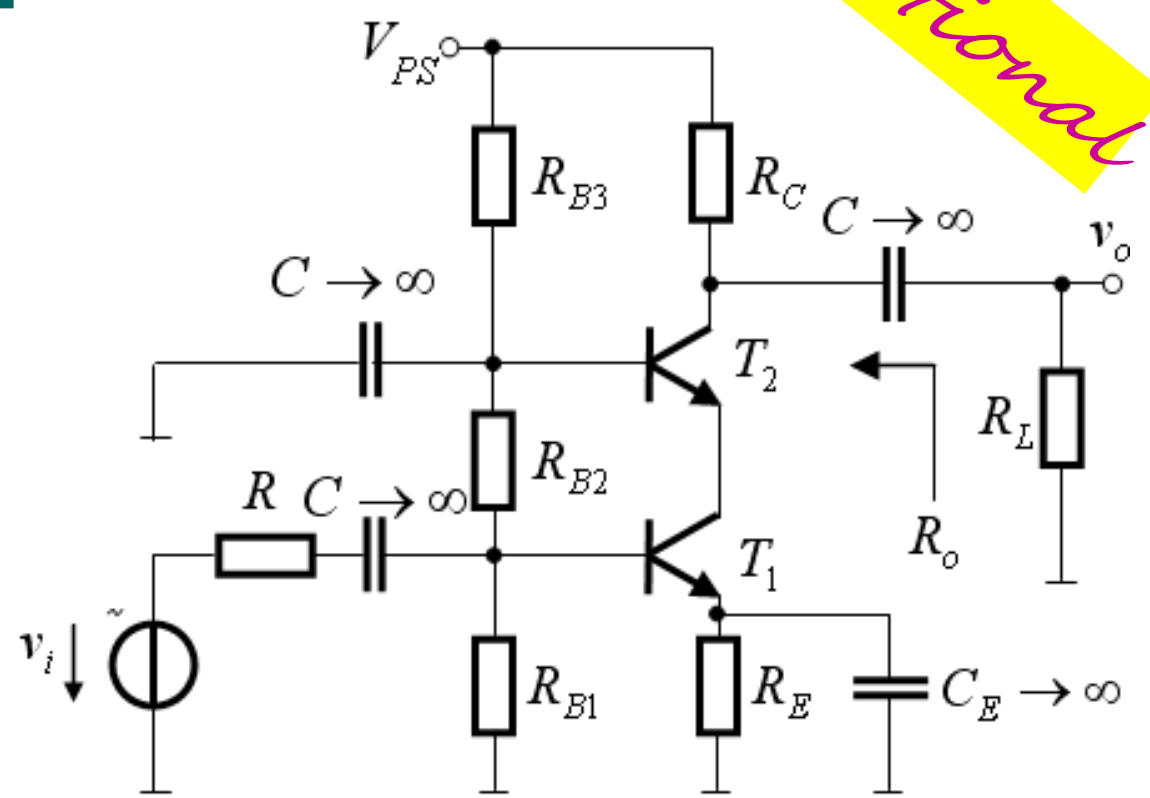

$$A_v = \frac{v_o}{v_i} = \frac{R_B \parallel r_{be1}}{R + R_B \parallel r_{be1}} \left(-g_{m1} \frac{1}{g_{m2}} \right) g_{m2} (R_C \parallel R_L)$$

$$\boxed{A_v = -\frac{R_B \parallel r_{be}}{R + R_B \parallel r_{be}} g_m (R_C \parallel R_L)}$$

$$\boxed{f_H = \frac{1}{2\pi (r_{be} \parallel R_B \parallel R)(C_{be} + 2C_{bc})}}$$